Triton Systems

Triton Cavity Drain Membranes

BS: 8102 (2009) – Type C Waterproofing – Drained Protection

Triton Contact Details:

Triton Systems Ltd.
Units 3 – 5 Crayford Commercial Centre, Greyhound Way, Crayford, Kent DA1 4HF

Tel: 01322 318 830
Fax: 01322 524 017
Email: info@tritonsystems.co.uk
www.tritonsystems.co.uk

BBA APPROVAL INSPECTION TESTING CERTIFICATION
CERTIFICATE 14/5129

1154 10/17

CONTENTS:

1. Cavity Drain Membranes – introduction and general guidelines
2. Platon P8 – data sheet, Declaration of Performance, BBA Certificate
3. Platon P20 – data sheet, Declaration of Performance, BBA Certificate
4. Platon Plasterbase – data sheet, Declaration of Performance, BBA Certificate
5. Platon PB2 Mesh – data sheet, Declaration of Performance
6. Platon Plaster Mesh – data sheet, Declaration of Performance
7. Platon Double Drain – data sheet, Declaration of Performance
8. Fire characteristics certificate for Platon membranes
9. Ancillary products
10. CAD detail drawings
11. NBS Plus Specifications
12. Case Studies

Triton Systems

Triton Cavity Drain Membranes

BS: 8102 (2009) – Type C Waterproofing – Drained Protection

1. Introduction and general guidelines for use

Type C waterproofing is defined in BS 8102: 2009 as 'drained protection' which is achieved by the incorporation of a drained cavity within the basement structure. The basement wall must provide enough primary resistance to water ingress to ensure the cavity only accepts a controlled amount of water or dampness. Water is collected in the cavity between the external wall and an internal lining (the cavity drain membrane) and diverted to a suitable drainage point.

A comprehensive range of pumps and drainage components is also available from Triton to complete a fully drained Type C waterproofing system. More information is available at tritonsystems.co.uk.

The use of cavity drain membranes does not allow pressure to build up against the internal construction and the air gap allows the structure to breathe - and to some extent to dry out. Cavity drain membranes are loose laid on floors and fixed to walls using special plugs and sealing materials, with little or no preparation required to the substrate. Once the membrane has been fitted, wall surfaces can be dry lined or plastered directly and floors can be screeded or a floating dry board system installed.

Installation guidelines:

For full instructions on the installation of a Type C system, please download The Platon Cavity Drain Membrane Installation Guide at tritonsystems.co.uk

Further reading: 'Best Practice Guidance Type C Waterproofing Systems' published by the PCA (Property Care Association) is available for download at tritonsystems.co.uk

Platon P8 Membrane

Description
A waterproofing drainage layer primarily used on walls but may be used on floors where depth of permissible build up is restricted. Platon P8 is manufactured from high density polyethylene (HDPE). It is impermeable to water, water vapour, Radon gas and is resistant to the chemicals and materials commonly used in building construction. When Platon P8 is used as a damp proof or waterproof membrane it may be installed independent of the moisture content in the underlying substrate.

Platon P8 is recommended as a drainage layer on walls and floors within a drained cavity membrane specification. Studs are formed in a regular pattern on the face of the membrane. The studs are spaced at approx. 25mm centres in both directions and are 7mm deep.

Workability
Platon P8 is tough but pliable and can be pre-formed around corners and projections without risk of breaking, even in very low temperatures. The membrane can be easily cut with a knife, shears or scissors.

Storage
Rolls of the membrane should be stored upright and preferably under cover.

Technical Data

Raw material:	HDPE
Sheet thickness:	Nominal 0.50 mm
Stud height:	Approx. 6.5 mm
Construction height:	Approx. 7 mm
Unit weight:	0.45 kg/m^2
Deformation under long term loading:	Max. 20% (at 50 kN/m^2)
Compressive strength:	150 kN/m^2
Working temperature:	–10° to +60°C
Softening temperature:	+160°C
Linear coefficient of thermal expansion:	0.18 mm/m.°C
Water vapour resistance:	280 m equivalent air layer
Air gap volume:	4.0 l/m^2
Drainage capacity:	Approx. 3.8 l/sm
No. of studs: approx.	1640 per m^2
Life expectancy:	At least 50 years for defined applications
Colour:	Natural

Platon P8 is CE marked in accordance with EN 13967 and EN 13984. A separate declaration gives values for several characteristics.

Chemical Resistance

Platon P8 membrane is resistant to the chemicals and materials commonly used in building construction. A small number of aggressive chemicals (e.g solvents) in large concentrations can to some extent attack Platon P8 membrane during prolonged exposure. If exposure to aggressive chemicals is anticipated, advice should be sought from our Technical department.

Temporary exposure to volatile solvents due to splashes or accidental leaks is unlikely to cause any long term damage. Tape or rope joints may need to be inspected and removed if softened or damaged.

Sizes

Rolls of 2.07 m x 20 m (including flat overlapping edge without studs).

Triton Contact Details:

Triton Systems
Units 3 – 5 Crayford Commercial Centre, Greyhound Way, Crayford, Kent DA1 4HF

Tel: 01322 318830
Fax: 01322 524017
Email: info@tritonsystems.co.uk

www.tritonsystems.co.uk

DECLARATION OF PERFORMANCE

Referanse: Platon P8

Date: 2013 07 01 version 1
Identification of building product: see product packaging

Damp proof ventilating and drainage sheet / Ventilating and draining vapour control layer

NS-EN 13967:2012 / NS-EN 13984:2013 AVCP 2+	**Isola as** **N-3945** **Porsgrunn, Norway**

Notified body SINTEF, certificate no. 1071-CPR-1196/1197

Essential characteristics	Performance
Reaction to fire	Class F
Tensile strength properties (minimum)	
MD	340 N/50 mm
CMD	225 N/50 mm
Resistance to static loading, øtool= 10mm:	Pass at 20 kg
Resistance to impact, wtool= 500g (method A):	Pass at 0,25 m
Resistance to tearing (minimum)	290 N
Joint strength	55 N
Watertightness: Durability	Pass at 2kPa
After heat ageing	Pass
After chemical ageing	Pass
Water vapour resistance: Durability	380 m ± 25%
After heat ageing	Pass
Durability against alkali	Pass
Dangerous substances	None
Resistance to deformation under load (max.)	30% at 50 kN/m²

The performance of the product identified is in conformity with the declared performance above.
This declaration of performance is issued under the sole responsibility of the manufacturer.
Signed for and on behalf of the manufacturer by:

Name and Function	Place and date of issue	Signature
Richard I. Waterhouse, Quality Manager, Platon Factory.	Notodden 01.07.2013	

Isola AS, Platon Factory
Lienfossveien 5
N-3678 Notodden
Norway
Tel: 0047 3557 5700 Fax: 0047 3502 7555
e-mail: isola@isola.no
website: www.isola.com

Agrément Certificate
01/3823
Product Sheet 4

SYSTEM PLATON

PLATON P8

This Agrément Certificate Product Sheet[1] relates to Platon P8, a translucent high-density polyethylene (HDPE) membrane for damp-proofing walls, floors and ceilings in new construction or in existing buildings. It can be used above or below ground, over a contaminated or damp background, to support a dry lining or flooring.

(1) Hereinafter referred to as 'Certificate'.

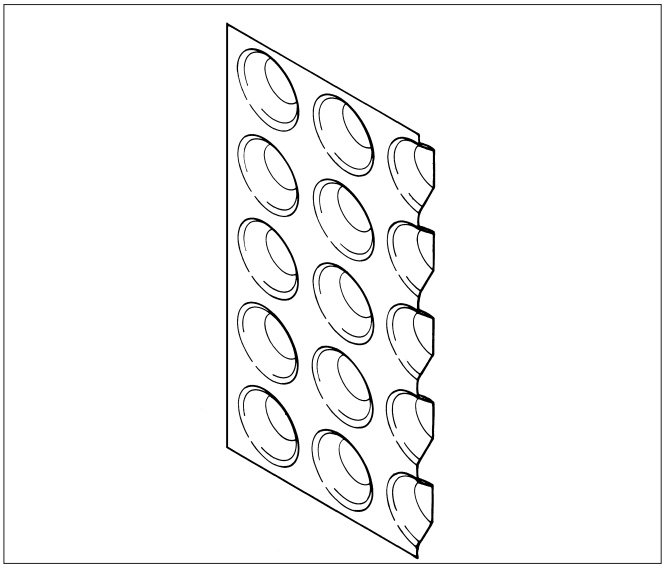

CERTIFICATION INCLUDES:

- factors relating to compliance with Building Regulations where applicable
- factors relating to additional non-regulatory information where applicable
- independently verified technical specification
- assessment criteria and technical investigations
- design considerations
- installation guidance
- regular surveillance of production
- formal three-yearly review.

KEY FACTORS ASSESSED

Resistance to water and water vapour — the membrane is water resistant and has a high resistance to water vapour transmission (see section 6).

Resistance to salt transfer — the membrane provides an effective barrier to the transmission of salts or other contaminants from the substrate (see section 8).

Resistance to puncture, impact and loading — the membrane has a high resistance to puncture and will not be damaged by normal foot traffic during installation, or while laying concrete or screeding. It can support the long-term loadings likely to be experienced in service without undue deformation (see section 9).

Durability — under normal conditions of use the membrane will provide an effective barrier to the transmission of salts, liquid water and water vapour for the life of the structure in which it is incorporated (see section 12).

The BBA has awarded this Certificate to the company named above for the product described herein. This product has been assessed by the BBA as being fit for its intended use provided it is installed, used and maintained as set out in this Certificate.

On behalf of the British Board of Agrément

Date of Second issue: 2 December 2013

Simon Wroe
Head of Approvals — Materials

Claire Curtis-Thomas
Chief Executive

The BBA is a UKAS accredited certification body — Number 113. The schedule of the current scope of accreditation for product certification is available in pdf format via the UKAS link on the BBA website at www.bbacerts.co.uk

Readers are advised to check the validity and latest issue number of this Agrément Certificate by either referring to the BBA website or contacting the BBA direct.

British Board of Agrément
Bucknalls Lane
Watford
Herts WD25 9BA
tel: 01923 665300
fax: 01923 665301
e-mail: mail@bba.star.co.uk
website: www.bbacerts.co.uk

Regulations

In the opinion of the BBA, Platon P8, if installed, used and maintained in accordance with this Certificate, will meet or contribute to meeting the relevant requirements of the following Building Regulations (the presence of a UK map indicates that the subject is related to the Building Regulations in the region or regions of the UK depicted):

The Building Regulations 2010 (England and Wales) (as amended)

Requirement:	C2(a)(b)	Resistance to moisture
Comment:		The product adequately resists the passage of moisture. See section 6.1 of this Certificate.
Regulation:	7	Materials and workmanship
Comment:		The product is acceptable. See section 12 and the *Installation* part of this Certificate.

The Building (Scotland) Regulations 2004 (as amended)

Regulation:	8(1)	Fitness and durability of materials and workmanship
Comment:		The product is acceptable. See section 12 and the *Installation* part of this Certificate.
Regulation:	9	Building standards applicable to construction
Standard:	3.3	Flooding and ground water
Comment:		The product can contribute to minimising or eliminating the effects of flooding on the building fabric and/or the building element, with reference to clause 3.3.1[(1)(2)]. See section 6.1 of this Certificate.
Standard:	3.4	Moisture from the ground
Comment:		The product adequately resists the passage of moisture with reference to clauses 3.4.1[(1)(2)], 3.4.2[(1)(2)], 3.4.5[(1)(2)], 3.4.6[(1)(2)] and 3.4.7[(1)(2)]. See section 6.1 of this Certificate.
Standard:	3.6(a)	Surface water drainage
Comment:		The product can contribute to satisfying this Standard, with reference to clause 3.6.3[(1)(2)]. See section 6.1 of this Certificate.
Standard:	3.10	Precipitation
Comment:		The product adequately resists the passage of moisture, with reference to clause 3.10.1[(1)(2)]. See section 6.1 of this Certificate.
Standard:	7.1(a)	Statement of sustainability
Comment:		The product can contribute to meeting the relevant Requirements of Regulation 9, Standards 1 to 6, and, therefore, will contribute to a construction meeting a bronze level of sustainability as defined in this Standard.
Regulation:	12	Building standards applicable to conversions
Comment:		All comments given for this product under Regulation 9, Standards 1 to 6, also apply to this Regulation, with reference to clause 0.12.1[(1)(2)] and Schedule 6[(1)(2)].

(1) Technical Handbook (Domestic).
(2) Technical Handbook (Non-Domestic).

The Building Regulations (Northern Ireland) 2012

Regulation:	23(a)(i)(iii)(b)(i)	Fitness of materials and workmanship
Comment:		The product is acceptable. See section 12 and the *Installation* part of this Certificate.
Regulation:	28(a)(b)	Resistance to moisture and weather
Comment:		The product adequately resists the passage of moisture. See section 6.1 of this Certificate.

Construction (Design and Management) Regulations 2007

Construction (Design and Management) Regulations (Northern Ireland) 2007

Information in this Certificate may assist the client, CDM co-ordinator, designer and contractors to address their obligations under these Regulations.

See section: 1 *Description* (1.2) of this Certificate.

Additional Information

NHBC Standards 2013

NHBC accepts the use of Platon P8, provided it is installed, used and maintained in accordance with this Certificate, in relation to *NHBC Standards*, Chapters 5.1 *Substructure and ground bearing floors* and 5.2 *Suspended ground floors*.

CE marking

The Certificate holder has taken the responsibility of CE marking the product in accordance with harmonised European Standards BS EN 13967 : 2012 and BS EN 13984 : 2013. An asterisk(*) appearing in this Certificate indicates that data shown are given in the manufacturer's Declaration of Performance.

Technical Specification

1 Description

1.1 Platon P8 is a translucent high-density polyethylene (HDPE) membrane, moulded to form raised studs at 25 mm centres (see Figure 1).

Figure 1 Platon P8

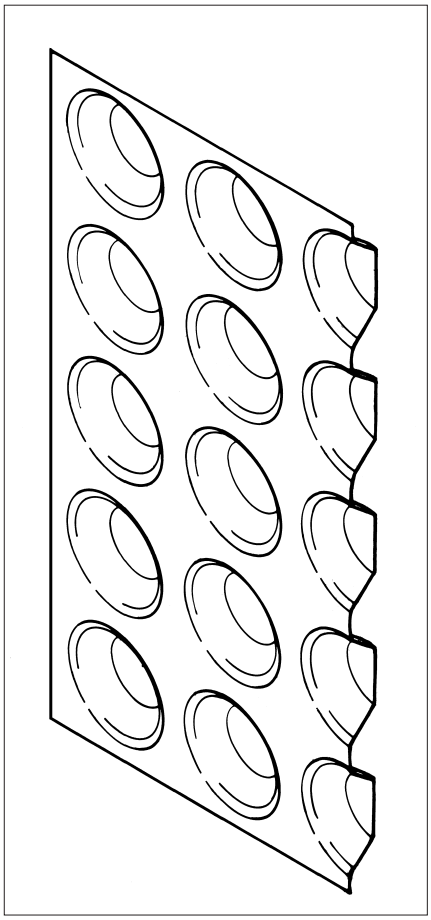

1.2 Platon P8 is supplied in roll form, and has characteristics of:

thickness (mm)	0.5
stud height (mm)	6.5
weight per unit area ($kg \cdot m^{-2}$)	0.48
roll size (m)[1]	2.07 x 20 and 2.47 x 20
weight of roll (kg)	19.87
air gap volume ($l \cdot m^{-2}$)	4.0

(1) Includes a 70 mm stud-free area for overlapping sheets.

1.3 Ancillary items used with the membrane include:

- Platon Brick Plug — a plastic plug for fixing membrane to brick and stone. The plug has a pre-formed hole permitting timber fixings to be inserted without breaching the membrane (see Figure 2)
- Platon Sealing Tape — butyl rubber tape for sealing joints in the membrane
- Platon Sealing Rope — butyl rubber beading for sealing joints in the membrane and sealing the membrane around pipes and openings, and to form a gasket between the brick plug and membrane
- Platon Sealer — butyl rubber sealant for sealing the membrane around pipes and openings
- Platon Overtape — butyl rubber tape, at least 100 mm wide, backed with non-woven polypropylene, for sealing joints in the membrane, and for use around services, penetrations and edge details, and between wall and floor membranes.

Figure 2 Platon Brick Plug fixing detail

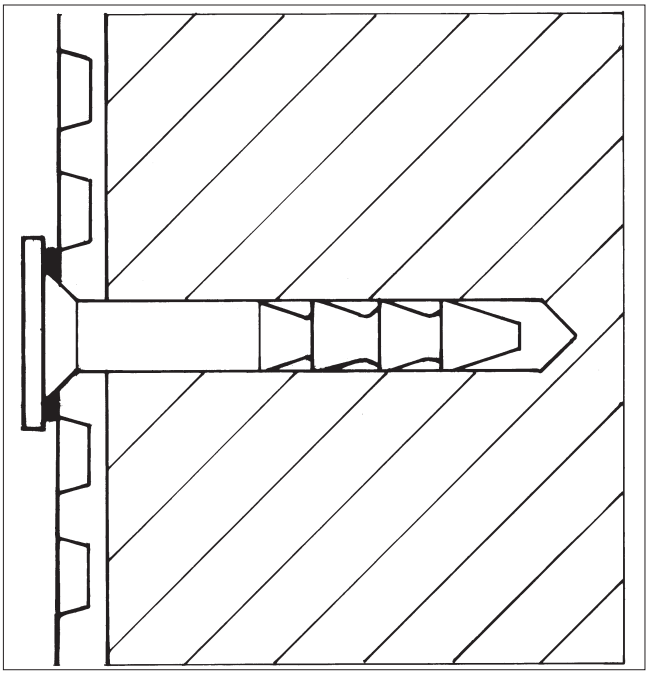

2 Manufacture

2.1 The membranes are formed in a continuous process in which high-density polyethylene (HDPE) is extruded into sheets and the stud impressions formed.

2.2 As part of the assessment and ongoing surveillance of product quality, the BBA has:

- agreed with the manufacturer the quality control procedures and product testing to be undertaken
- assessed and agreed the quality control operated over batches of incoming materials
- monitored the production process and verified that it is in accordance with the documented process
- evaluated the process for management of nonconformities
- checked that equipment has been properly tested and calibrated
- undertaken to carry out the above measures on a regular basis through a surveillance process, to verify that the specifications and quality control operated by the manufacturer are being maintained.

2.3 The management system of Isola AS, Platon Factory has been assessed and registered as meeting the requirements of BS EN ISO 9001 : 2008 by DNV (Certificate QSC – 6064).

3 Delivery and site handling

3.1 The membranes are delivered to site in wrapped rolls bearing the product and manufacturer's name and the BBA logo bearing the number of this Certificate.

3.2 Rolls should be stored on end, under cover and protected from sharp objects, sunlight and high temperatures.

Assessment and Technical Investigations

The following is a summary of the assessment and technical investigations carried out on Platon P8.

Design Considerations

4 Use

4.1 Platon P8 is satisfactory for use as damp-proof membrane on walls, floors and vaulted ceilings, above and below ground, in new construction or in existing buildings over a contaminated or damp background. It can support a dry lining, screed or flooring, in the following situations:

- on damp walls and floors in underground situations subject to high groundwater levels and perennial moisture
- on vaulted ceilings of archways or cellars subject to water ingress
- in conjunction with a remedial dpc system where the walls and floors have a high salt content, and/or it is necessary to complete the installation immediately without allowing a period for initial drying
- over walls and floors which have a friable or painted surface, are contaminated (eg with oil or mould) or have a high salt content
- as a waterproofing membrane in areas subject to vibration.

4.2 Depending on the application required and the site conditions, the membrane may be used as:

- an underfloor damp-proof membrane
- a dry-lining for walls, vented into the room via aeration slots at the top and bottom of the wall
- a sealed system covering floor, wall and ceiling with provision made for disposing of water build-up behind the membrane via a sump and pump.

4.3 The membrane has not been assessed for use in chemically contaminated areas, such as brownfield sites.

4.4 The membrane consists of 0.5 mm thick HDPE and, in the opinion of the BBA, meets the requirement for a radon barrier according to BRE Report (BR 211 : 2007) *Radon : guidance on protective measures for new buildings*. However, the effectiveness of the joint sealing system used with Platon P8 has not been assessed against radon by the BBA and is outside the scope of this Certificate.

4.5 The system is satisfactory for use in Type C (drained protection) structural concrete constructions in accordance with BS 8102 : 2009.

4.6 Under normal operating conditions, the membrane is not affected by underfloor heating.

5 Practicability of installation

The product is designed to be installed by competent specialist contractors experienced with damp-proofing work.

6 Resistance to water and water vapour

6.1 The membrane is water resistant and has a high resistance to water vapour transmission. However, the product as installed is not resistant to hydrostatic pressure and, consequently, the measures described in the *Installation* part of this Certificate must be followed to ensure that the membrane acts as a drainage layer with no excessive build-up of water behind it.

6.2 All joints and fixings must be sealed with Platon sealing products, and drainage channels and gullies, or sumps and pumps should be installed as necessary to disperse excess or standing water.

7 Risk of condensation

7.1 As with any room, there is a need to control the generation and dispersal of moisture in the internal environment and to select appropriate and robust designs to minimise the risk of both surface and interstitial condensation, especially where insulation is used over the membrane.

7.2 In common with most waterproofing membranes, the product has a very high resistance to vapour diffusion, and when placed on the cold side of a construction may increase the risk of interstitial condensation. A calculation should be carried out to BS 5250 : 2011 and designers should consider appropriate techniques for managing the safe egress of moisture vapour with care (such as control of the internal room environment or use of a vapour control layer on the warm side of the insulation), and in particular the effect of moisture on any materials at or in contact with materials below the local dew-point.

8 Resistance to salt transfer

The product provides an effective barrier to the transmission of salts or other contaminants from the substrate.

9 Resistance to puncture, impact and loading

9.1 The membrane has a high resistance to puncture and will not be damaged by normal foot traffic during installation or while laying concrete or screeding to BS 8204-1 : 2003 + A1 : 2009.

9.2 The membrane can support the long-term imposed loadings defined in the National Annex to BS EN 1991-1-1 : 2002, Table NA.2, categories A to D, without undue deformation.

10 Wall-mounted fittings

Wall-mounted fittings (apart from lightweight items such as framed pictures) should be fixed where possible into battens, the position and number of support fixings into the loadbearing structure of which are predetermined. Only in exceptional circumstances should fittings be fixed through the membrane and lining board to the loadbearing structure behind, using proprietary fixings. Holes made in the membrane must be filled with a flexible sealant, such as Platon Sealer, Rope or Tape.

11 Maintenance

11.1 As the membrane is confined within a wall, ceiling or floor space and has suitable durability (see section 12), maintenance is not required.

11.2 Regular maintenance of all gullies, sumps and pumps must be conducted to ensure that a build-up of water does not occur behind the membrane.

12 Durability

Under normal conditions of use the product will provide an effective barrier to the transmission of salts, liquid water and water vapour for the life of the structure in which it is incorporated.

13 Reuse and recyclability

The product comprises polyethylene, which can be recycled.

Installation

14 Survey

14.1 Where the area to be treated is below ground, or where conditions are damp, a full survey by a specialist waterproofing surveyor is necessary, to diagnose the cause and to establish if treatment is required.

14.2 If rising damp is found, a remedial treatment is conducted in accordance with the relevant Agrément Certificate, BS 6576 : 2005 and the Property Care Association *Code of Practice for Installation of Remedial Damp-proof Courses in Masonry Walls*.

14.3 Appropriate remedial measures are taken to rectify major causes of damp conditions or water ingress, and to repair structural defects.

15 Surface preparation

15.1 When used in new constructions, the concrete base must be laid in accordance with BS 8204-1 : 2003.

15.2 If a board covering is to be laid directly on the membrane, the concrete base must have a surface regularity with a maximum permissible departure of 5 mm from the underside of a 2 m straight edge, resting in contact with the floor in accordance with BS 8204-1 : 2003 + A1 : 2009.

15.3 Any unsound plaster, render or screed is removed to expose the substrate which is then cleaned with a stiff brush to remove loose material, laitance, salt residue, mould or adhesive. If mould is present the substrate should be treated with a fungicidal wash. The Certificate holder can advise on suitable materials and procedures to be used.

15.4 Uneven substrates should be dubbed out with a cement-sand (1:4) render or screed, to the tolerance described in section 15.2. They should be allowed to set before the membrane is fixed.

16 Procedure

General

16.1 Platon P8 may be used in combination with any of the appropriate Platon membranes which are the subject of other Product Sheets of this Certificate.

16.2 The membrane should always be used with the flanged edge positioned in front of and overlapping the previously installed membrane width. Joints with the flanged edge are sealed using Platon Sealing Tape, while stud-to-stud joints (without the flanged edge) are sealed by overlapping the membrane by a minimum of 200 mm and using Platon Overtape.

16.3 At corners where membranes are not installed continuously from one surface to the next, they should be finished at the corner on each surface and sealed together using Platon Overtape.

16.4 Fixings are made through the membrane into 10 mm holes drilled centrally through the studs. Platon Brick Plugs, to which Platon Sealing Rope has been applied around the rim, are inserted into the holes and tapped flush with the membrane. The Platon Sealing Rope forms a sealing gasket between the plug and membrane.

16.5 On walls and ceilings, preservative-treated timber battens of minimum dimensions 25 mm by 38 mm are fixed into the plug's fixing hole using suitable screws with a maximum screwing-in depth of 25 mm plus the batten depth. If required, Platon Sealer is injected into the fixing holes to reduce the risk of water penetration. The membrane can also be dry-lined, using free-standing framework, blockwork or similar.

Walls

16.6 Installation of the membrane is commenced at the top of the construction. The membrane may require initial fixing on a ceiling or along the upper edge of a wall, prior to final fixings along batten runs. For joints where the flanged edge is not used, the two membrane sheets are overlapped by a minimum of 200 mm, and for horizontal joints the lower sheet is always positioned in front of the upper sheet.

16.7 Spacings between fixings will depend on the method of dry lining to be applied. When using preservative-treated timber battens the fixings should be kept to a maximum of 600 mm. Proprietary metal fast track systems and independent frame systems will require fewer fixings, but sufficient should be used to ensure that the membrane is reasonably tight to the wall, especially at corners.

16.8 The installation is conducted over windows and the membrane is cut away to expose them. The gaps are then sealed with Platon Sealing Tape or Rope.

16.9 For doors and some obstructions, the technique covered in section 16.8 cannot be used. Instead, the membrane is installed up to the perimeter and the gap sealed in the same manner.

16.10 Power cables, points and light switches should preferably be remounted in front of the membrane.

16.11 In below-ground installations, the practice of leaving the top of the wall membrane unsealed where there is no requirement for a ceiling membrane to be installed may need to be reconsidered in cases where ingress of gases, odours or vermin is a consideration (such as in proximity to food preparation areas). The advice of the Certificate holder should be sought in these situations.

16.12 In above-ground installations, the build-up of water vapour behind the membrane is controlled by venting into the room. To facilitate this, the membrane is installed with a 10 mm gap at the top and a 20 mm gap at the bottom of the wall. Spacers measuring 3 mm by 200 mm are fixed at 600 mm centres behind the skirting board and ceiling coving to ensure a ventilation gap (see Figure 3). Alternatively, a proprietary ventilated skirting board or ceiling coving may be used.

Figure 3 Wall detail with dry lining (ventilated system)

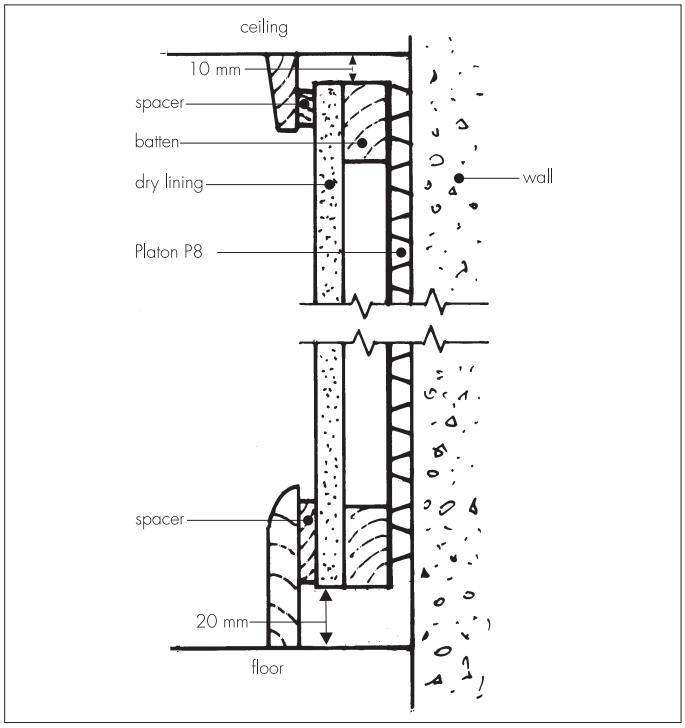

Ceilings

16.13 Ceilings to be covered must always have a fall, as per vaulted cellar constructions, to ensure water does not build up against the membrane or a joint. The vertical drop between the ends of two membrane sheets for horizontal overlaps should be a minimum of 100 mm.

16.14 Any sagging of the membrane between fixing points should not be great enough for ponding to occur.

16.15 At the end walls of vaulted constructions the membrane must be turned down onto the end wall by a minimum 300 mm (ie 12 studs). The membrane is mitred as necessary to fit the curve of the ceiling, and the joint sealed with Platon Sealing Tape or Rope. The wall membrane should be cut to fit the curve of the ceiling, fixed in front of the ceiling membrane, and the gap sealed with Platon Sealing Tape or Rope or Platon Sealer.

Floors

16.16 Floors should have a drainage outlet point. There should be a fall towards the outlet point or a drainage channel made around the perimeter of the floor, to ensure water can flow to the outlet.

16.17 The membrane is rolled out 'studs down' over the floor, and consecutive membrane widths are laid so the flanged edge overlaps the first sheet by two studs. Joints are sealed using Platon Sealing Tape. Joints without the flanged edge are oversealed using Platon Overtape.

16.18 The membrane is cut within 5 mm to 10 mm of any pipes and services in the floor, and the gap filled with Platon Sealing Rope. A patch of membrane is overlaid and sealed to the service with Platon Sealing Rope, and its circumference sealed with Platon Sealing Tape.

16.19 Fixings must not be applied through the floor membrane.

16.20 Where appropriate, at wall/floor junctions and corners of the installation, the membrane should be cut flush and the gap between the wall and floor membranes sealed with Platon Overtape. Alternatively, where a wall membrane is not being installed the floor membrane may be turned up by 100 mm at the wall and cut flush with the top of the finished floor.

17 Dry lining of walls

Gypsum plasterboard to BS EN 520 : 2004, or similar dry lining boards covered by a current Agrément Certificate, are fixed to the battens with galvanized screws or nails, positioned a minimum of 12 mm from the edge of the board. Care should be taken to ensure that penetration of the plasterboard by screws or nails is less than batten depth to avoid puncturing the membrane.

18 Floor membrane coverings

18.1 If required, extruded, closed-cell polystyrene insulation boards (minimum density 30 $kg \cdot m^{-3}$) are laid over the membrane.

18.2 Suitable tongue-and-groove flooring board panels should be selected in accordance with BS EN 12871 : 2010, and loose-laid over the membrane to within 10 mm of the walls. The panels are staggered and the joints sealed with a thermoplastic wood adhesive to BS EN 204 : 2001.

18.3 Alternatively, the membrane is covered by concrete or screed of minimum thickness 50 mm (or of minimum thickness 65 mm if laid over insulation boards) in accordance with BS 8204-1 : 2003. Care should be taken to ensure the membrane is not displaced when placing the concrete or screed. The concrete screed should be reinforced to inhibit shrinkage cracks.

18.4 Proprietary screeds, which can generally be laid at thicknesses less than 50 mm, may also be considered but use of these products with the membrane has not been assessed by the BBA, and is outside the scope of this Certificate.

19 Finishing works

After the product has been installed and the walls dry-lined, permanent decorations, such as vinyl papers or oil paints, may be applied. Temporary permeable decorations (necessary with traditional, cement-based waterproofers) are not necessary for use with this product.

Technical Investigations

20 Tests

20.1 Tests were carried out on Platon P8, and the results assessed, to determine:

- thickness
- resistance to short-term compression
- resistance to long-term loading
- nail-tear resistance
- effectiveness of sealing rope/membrane bond.

20.2 Independent test reports were examined and assessed, relating to:

- melt flow index
- tensile strength and elongation at break.

21 Investigations

21.1 The manufacturing process was evaluated, and details obtained of the raw material specifications and quality control procedures.

21.2 An assessment was made of the scope of use and durability of the product in relation to the generic properties of the membrane.

Bibliography

BS 5250 : 2011 *Code of practice for control of condensation in buildings*

BS 6576 : 2005 *Code of practice for diagnosis of rising damp in walls of buildings and installation of chemical damp-proof courses*

BS 8102 : 2009 *Code of practice for protection of below ground structures against water from the ground*

BS 8204-1 : 2003 + Amendment 1 : 2009 *Screeds, bases and in-situ floorings — Concrete bases and cement sand levelling screeds to receive floorings — Code of practice*

BS EN 204 : 2001 *Classification of thermoplastic wood adhesives for non-structural applications*

BS EN 520 : 2004 *Gypsum plasterboards — Definitions, requirements and test methods*

BS EN 12871 : 2010 *Wood-based panels — Performance specifications and requirements for load bearing boards for use in floors, walls and roofs*

NA to BS EN 1991-1-1 : 2002 *UK National Annex to Eurocode 1 : Actions on structures — General actions— Densities, self-weight, imposed loads for buildings*

BS EN 13967 : 2012 *Flexible sheets for waterproofing — Plastic and rubber damp proof sheets including plastic and rubber basement tanking sheet — Definitions and characteristics*

BS EN 13984 : 2013 *Flexible sheets for waterproofing — Plastic and rubber vapour control layers — Definitions and characteristics*

BS EN ISO 9001 : 2008 *Quality management systems — Requirements*

Property Care Association COP09 *Code of Practice for Installation of Remedial Damp-proof Courses in Masonry Walls*

Conditions of Certification

22 Conditions

22.1 This Certificate:

- relates only to the product/system that is named and described on the front page
- is issued only to the company, firm, organisation or person named on the front page — no other company, firm, organisation or person may hold or claim that this Certificate has been issued to them
- is valid only within the UK
- has to be read, considered and used as a whole document — it may be misleading and will be incomplete to be selective
- is copyright of the BBA
- is subject to English Law.

22.2 Publications, documents, specifications, legislation, regulations, standards and the like referenced in this Certificate are those that were current and/or deemed relevant by the BBA at the date of issue or reissue of this Certificate.

22.3 This Certificate will remain valid for an unlimited period provided that the product/system and its manufacture and/or fabrication, including all related and relevant parts and processes thereof:

- are maintained at or above the levels which have been assessed and found to be satisfactory by the BBA
- continue to be checked as and when deemed appropriate by the BBA under arrangements that it will determine
- are reviewed by the BBA as and when it considers appropriate.

22.4 The BBA has used due skill, care and diligence in preparing this Certificate, but no warranty is provided.

22.5 In issuing this Certificate, the BBA is not responsible and is excluded from any liability to any company, firm, organisation or person, for any matters arising directly or indirectly from:

- the presence or absence of any patent, intellectual property or similar rights subsisting in the product/system or any other product/system
- the right of the Certificate holder to manufacture, supply, install, maintain or market the product/system
- actual installations of the product/system, including their nature, design, methods, performance, workmanship and maintenance
- any works and constructions in which the product/system is installed, including their nature, design, methods, performance, workmanship and maintenance
- any loss or damage, including personal injury, howsoever caused by the product/system, including its manufacture, supply, installation, use, maintenance and removal
- any claims by the manufacturer relating to CE marking.

22.6 Any information relating to the manufacture, supply, installation, use, maintenance and removal of this product/system which is contained or referred to in this Certificate is the minimum required to be met when the product/system is manufactured, supplied, installed, used, maintained and removed. It does not purport in any way to restate the requirements of the Health and Safety at Work etc. Act 1974, or of any other statutory, common law or other duty which may exist at the date of issue or reissue of this Certificate; nor is conformity with such information to be taken as satisfying the requirements of the 1974 Act or of any statutory, common law or other duty of care.

British Board of Agrément
Bucknalls Lane
Watford
Herts WD25 9BA

tel: 01923 665300
fax: 01923 665301
e-mail: mail@bba.star.co.uk
website: www.bbacerts.co.uk

Platon P20 Membrane

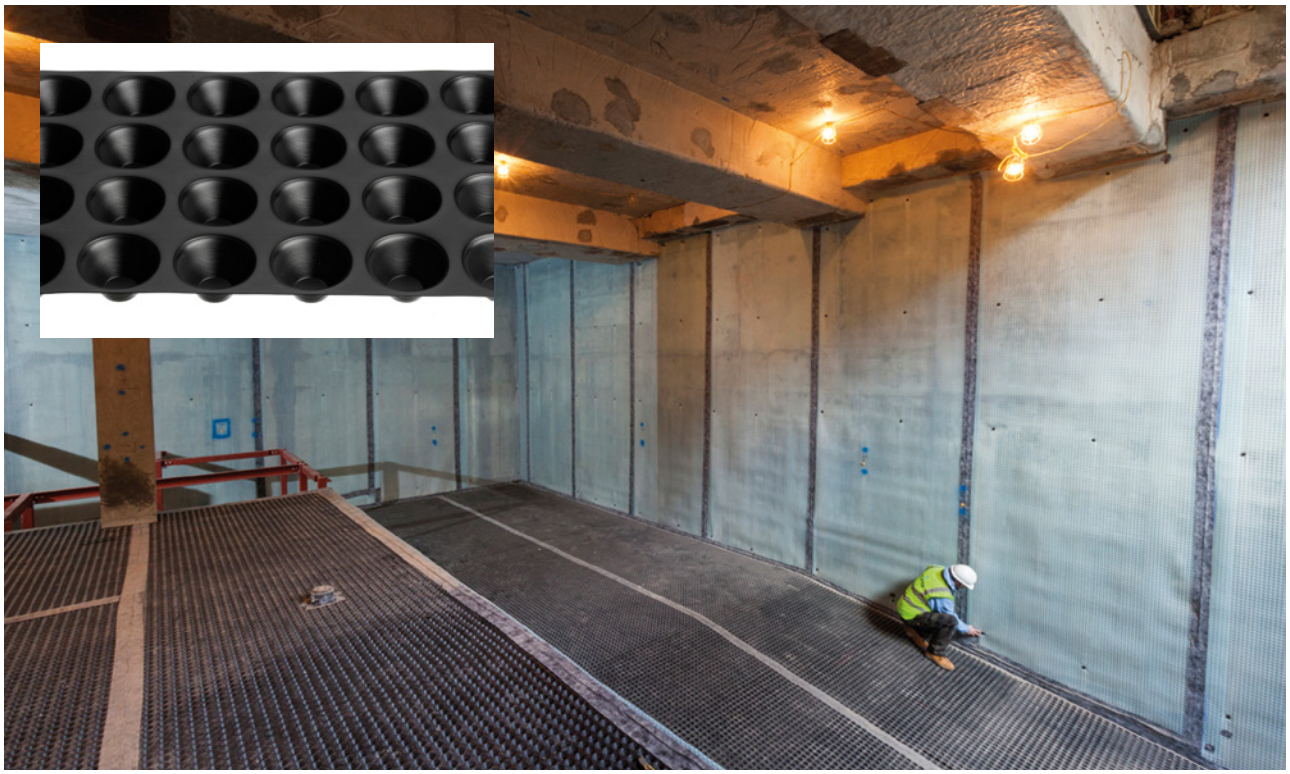

Description
A waterproofing drainage layer primarily for use over floors and against steel sheet piling within a Drained Cavity Membrane specification. Platon P20 Membrane is manufactured from black high-density polyethylene (HDPE). It is impermeable to water, water vapour, Radon gas and is resistant to the chemicals and materials commonly used in building construction. When P20 is used as a damp-proof or waterproof membrane it may be installed independent of the moisture content in the underlying concrete construction. Any water running over the substrate has de-pressurized into the air gap under the membrane.

Studs are formed in a regular pattern on the one face of the membrane. The studs are spaced at approximately 60mm centres and are 20mm deep.

High capacity P20 is recommended for use on all floor applications below ground due to its ability to deal with and isolate running water. The deep stud profile is designed to provide a large water capacity per square metre and thus resist potential blockages caused by lime deposits, (Triton Anti-Lime Coating or Triton TT Super must be used as a dressing on concrete or concrete filled blockwork).

Workability
Platon P20 Membrane is tough but pliable and can be formed around corners and projections without risk of breaking even in very low temperatures. The membrane can be easily cut with a knife, shears or scissors.

Storage
Sheets of Platon P20 Membrane should be stored flat and rolls of P20 Membrane should be stored upright.

Technical Data

Sheet thickness:	Nominal 1.00 mm
Stud height (net):	Approx. 20 mm
Unit weight:	0.95 kg/m^2
Tensile strength at yield:	at least 10 N/mm^2
Elongation at yield:	at least 15%
Max. Compressive strength:	240 kN/m^2
Deformation under long term loading:	Max. 10% (load of 50 kN/m^2)
Working temperature:	–50° to +80°C
Softening temperature:	+125°C
Linear coefficient of thermal expansion:	0.13 mm/m.°C
Life Expectancy:	at least 50 years for defined applications
Thermal Resistance:	0.17 m^2.°C/W
Water vapour resistance:	3500m^2.s.Gpa/KG
Drainage Capacity:	Max. 13 litre/m^2
Air gap volume:	14 l/m^2
Colour:	Black

Chemical Resistance

Platon P20 Membrane is resistant to the chemicals and materials commonly used in building construction. A small number of aggressive chemicals (e.g. solvents) in large concentrations, can to some extent attack Platon P20 Membrane during prolonged exposure. If exposure to aggressive chemicals is anticipated, advice should be sought from our Technical department. Temporary exposure to volatile solvent due to splashes or accidental leaks is unlikely to cause any long term damage. Tape or Rope joints may need to be inspected and renewed if softened or damaged.

Sizes

Rolls of 2.0 m x 20 m x 20 mm, also available in convenient sheet form (1.36 m x 2.22 m).

Triton Contact Details:

Triton Systems
Units 3 – 5 Crayford Commercial Centre, Greyhound Way, Crayford, Kent DA1 4HF

Tel: 01322 318830
Fax: 01322 524017
Email: info@tritonsystems.co.uk

www.tritonsystems.co.uk

Triton Systems
Units 3 – 5 Crayford Commercial Centre, Greyhound Way, Crayford, Kent DA1 4HF
Tel: 01322 318830 Fax: 01322 524017 Email: info@tritonsystems.co.uk
www.tritonsystems.co.uk

Declaration of Performance (DOP)
0005CPR/4354/20150616

1. **Product Name** P20

2. **Product Type** Art. Nr. 8 13 xx xxxx x 10 (see product)

3. **Intended Use** Waterproofing sheet for damp proof sheet, type V

4. **Name, registered trade name** Triton Systems
Units 3-5 Crayford Commercial Centre
Greyhound Way, Crayford, Kent DA9 9AQ

5. **Where applicable name and contact address of the authorised representative whose mandate covers the task specified in Article 12(2):**
See above

6. **AVCP** System 2+

7. **Notified Body:**
In case of the DoP concerning a construction product covered by the harmonised standard: DIN EN 13967: 2012
Notified body SKZ TeConA GmbH (ID 1213) performed the initial inspection of the manufacturing plant and of factory production control (FPC) and the continuous surveillance, assessment and evaluation of FPC and issued the certificate of conformity of the FPC no. 4354.

8. Declared Performance

Essential characteristics	Performance		Test Standard	*Harmonised technical specification*
Water Tightness (60 kPa; 24h)	Waterproof		EN 1928	*DIN EN 13967:2012*
Compressive strength	240	kN/m²	DIN EN ISO 25619-2	
Tear resistance	MD npd CMD npd		DIN EN 12310 -1	
Tensile Strength	MD npd CMD npd	kN/m	DIN EN ISO 10319:1996	
Elongation	MD npd	%	DIN EN ISO 10319:1996	
Compressive creep (resistance to static load)	npd		DIN EN 13967 Annex B	
Impact resistance	npd		DIN EN 12691	
Durability against ageing	npd		EN 1296 / EN 1928	
Fire resistance	E		DIN EN 13501-1	

9. Declaration
The performance of this product identified in points 1 and 2 is in conformity with the declared performance in point 8. This declaration of performance is issued under the sole responsibility of the manufacturer identified in point 4.
Signed for and on behalf of the manufacturer by:

Name and function	Place and date of issue	Signature
Mr Neil Taylor – Director	*Crayford 29.06.2015*	

Isola AS, Platon Factory
Lienfossveien 5
N-3678 Notodden
Norway
Tel: 0047 3557 5700 Fax: 0047 3502 7555
e-mail: isola@isola.no
website: www.isola.com

Agrément Certificate
01/3823
Product Sheet 2

SYSTEM PLATON

PLATON P20

This Agrément Certificate Product Sheet[1] relates to Platon P20, a high-density polyethylene (HDPE) membrane for damp-proofing walls and floors that require a large air gap for a high drainage volume in new constructions or in existing buildings. It can be used above and below ground, over a contaminated or damp background, to support dry lining or flooring.

(1) Hereinafter referred to as 'Certificate'.

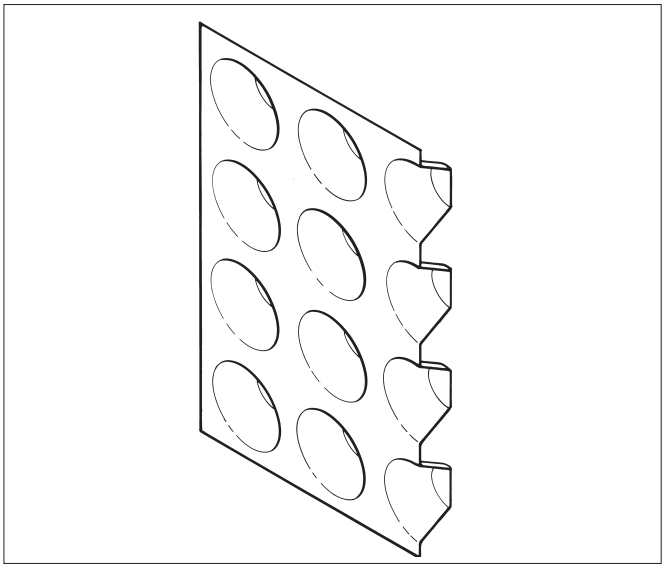

CERTIFICATION INCLUDES:

- factors relating to compliance with Building Regulations where applicable
- factors relating to additional non-regulatory information where applicable
- independently verified technical specification
- assessment criteria and technical investigations
- design considerations
- installation guidance
- regular surveillance of production
- formal three-yearly review.

KEY FACTORS ASSESSED

Resistance to water and water vapour — the membrane is water resistant and has a high resistance to water vapour transmission (see section 6).

Resistance to salt transfer — the membrane provides an effective barrier to the transmission of salts or other contaminants from the substrate (see section 8).

Resistance to puncture, impact and loading — the membrane has a high resistance to puncture and will not be damaged by normal foot traffic during installation, or while laying concrete or screeding. It can support the long-term loadings likely to be experienced in service without undue deformation (see section 9).

Durability — under normal conditions of use the membrane will provide an effective barrier to the transmission of salts, liquid water and water vapour for the life of the structure in which it is incorporated (see section 12).

The BBA has awarded this Certificate to the company named above for the product described herein. This product has been assessed by the BBA as being fit for its intended use provided it is installed, used and maintained as set out in this Certificate.

On behalf of the British Board of Agrément

Date of Second issue: 2 December 2013

Originally certificated on 9 October 2001

Simon Wroe
Head of Approvals — Materials

Claire Curtis-Thomas
Chief Executive

The BBA is a UKAS accredited certification body — Number 113. The schedule of the current scope of accreditation for product certification is available in pdf format via the UKAS link on the BBA website at www.bbacerts.co.uk

Readers are advised to check the validity and latest issue number of this Agrément Certificate by either referring to the BBA website or contacting the BBA direct.

British Board of Agrément
Bucknalls Lane
Watford
Herts WD25 9BA
tel: 01923 665300
fax: 01923 665301
e-mail: mail@bba.star.co.uk
website: www.bbacerts.co.uk

Regulations

In the opinion of the BBA, Platon P20, if installed, used and maintained in accordance with this Certificate, will meet or contribute to meeting the relevant requirements of the following Building Regulations (the presence of a UK map indicates that the subject is related to the Building Regulations in the region or regions of the UK depicted):

The Building Regulations 2010 (England and Wales) (as amended)

Requirement:	C2(a)(b)	Resistance to moisture
Comment:		The product adequately resists the passage of moisture. See section 6.1 of this Certificate.
Regulation:	7	Materials and workmanship
Comment:		The product is acceptable. See section 12 and the *Installation* part of this Certificate.

The Building (Scotland) Regulations 2004 (as amended)

Regulation:	8(1)	Fitness and durability of materials and workmanship
Comment:		The product is acceptable. See section 12 and the *Installation* part of this Certificate.
Regulation:	9	Building standards applicable to construction
Standard:	3.3	Flooding and ground water
Comment:		The product can contribute to minimising or eliminating the effects of flooding on the building fabric and/or the building element, with reference to clause 3.3.1[(1)(2)]. See section 6.1 of this Certificate.
Standard:	3.4	Moisture from the ground
Comment:		The product adequately resists the passage of moisture with reference to clauses 3.4.1[(1)(2)], 3.4.2[(1)(2)], 3.4.5[(1)(2)], 3.4.6[(1)(2)] and 3.4.7[(1)(2)]. See section 6.1 of this Certificate.
Standard:	3.6(a)	Surface water drainage
Comment:		The product can contribute to satisfying this Standard, with reference to clause 3.6.3[(1)(2)]. See section 6.1 of this Certificate.
Standard:	3.10	Precipitation
Comment:		The product adequately resists the passage of moisture, with reference to clause 3.10.1[(1)(2)]. See section 6.1 of this Certificate.
Standard:	7.1(a)	Statement of sustainability
Comment:		The product can contribute to meeting the relevant Requirements of Regulation 9, Standards 1 to 6, and, therefore, will contribute to a construction meeting a bronze level of sustainability as defined in this Standard.
Regulation:	12	Building standards applicable to conversions
Comment:		All comments given for this product under Regulation 9, Standards 1 to 6, also apply to this Regulation, with reference to clause 0.12.1[(1)(2)] and Schedule 6[(1)(2)].

(1) Technical Handbook (Domestic).
(2) Technical Handbook (Non-Domestic).

The Building Regulations (Northern Ireland) 2012

Regulation:	23(a)(i)(iii)(b)(i)	Fitness of materials and workmanship
Comment:		The product is acceptable. See section 12 and the *Installation* part of this Certificate.
Regulation:	28(a)(b)	Resistance to moisture and weather
Comment:		The product adequately resists the passage of moisture. See section 6.1 of this Certificate.

Construction (Design and Management) Regulations 2007

Construction (Design and Management) Regulations (Northern Ireland) 2007

Information in this Certificate may assist the client, CDM co-ordinator, designer and contractors to address their obligations under these Regulations.

See section: 1 *Description* (1.2) of this Certificate.

Additional Information

NHBC Standards 2013

NHBC accepts the use of Platon P20, provided it is installed, used and maintained in accordance with this Certificate, in relation to *NHBC Standards*, Chapters 5.1 *Substructure and ground bearing floors* and 5.2 *Suspended ground floors*.

CE marking

The Certificate holder has taken the responsibility of CE marking the product in accordance with harmonised European Standard BS EN 13967 : 2012. An asterisk(*) appearing in this Certificate indicates that data shown are given in the manufacturer's Declaration of Performance.

Technical Specification

1 Description

1.1 Platon P20 is a black, high-density polyethylene (HDPE) membrane, moulded to form raised studs at 50 mm (roll), and 60 mm (sheet) centres (see Figure 1).

Figure 1 Platon P20

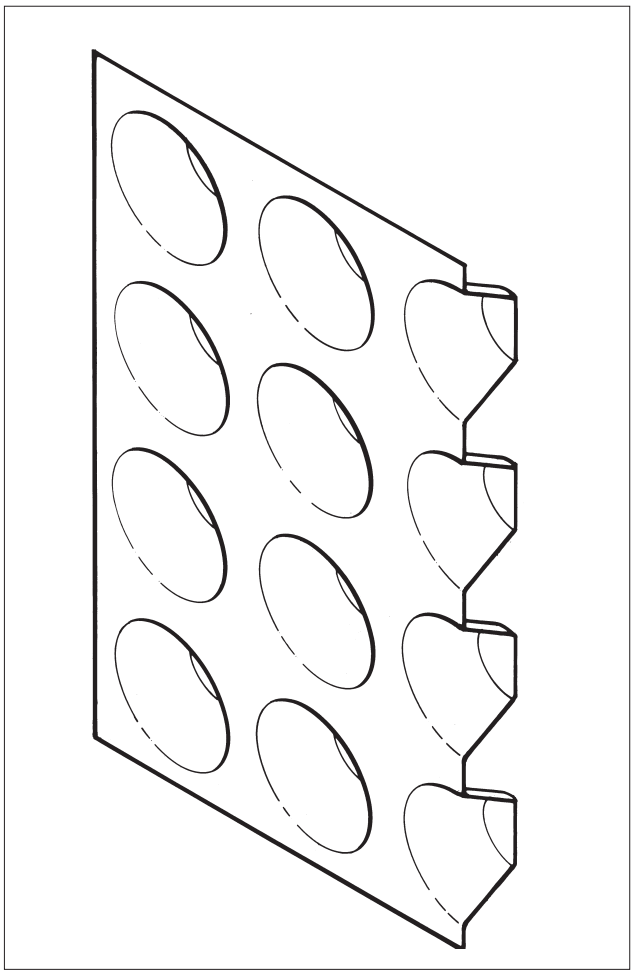

1.2 Platon P20 is supplied in roll and sheet form, and has characteristics of:

thickness (mm)	0.9
stud height (mm)	20
weight per unit area ($kg \cdot m^{-2}$)	0.95
roll size (m)	2.0 x 20
weight of roll (kg)	38 approx
sheet size (m)	1.36 x 2.18
air gap volume ($l \cdot m^{-2}$)	14.

1.3 Ancillary items used with the membranes include:

- Platon Brick Plug — a plastic plug for fixing membrane to brick and stone. The plug has a pre-formed hole permitting timber fixings to be inserted without breaching the membrane (see Figure 2)
- Platon Sealing Tape — butyl rubber tape for sealing around penetrations through the membrane
- Platon Sealing Rope — butyl rubber beading for sealing joints in the membrane and sealing the membrane around pipes and openings, and to form a gasket between the brick plug and membrane
- Platon Sealer — butyl rubber sealant for sealing the membrane around pipes and openings
- Platon Overtape — butyl rubber tape, at least 100 mm wide, backed with non-woven polypropylene, for sealing joints in the membrane, and for use around services, penetrations and edge details, and between wall and floor membranes.

Figure 2 Platon Brick Plug

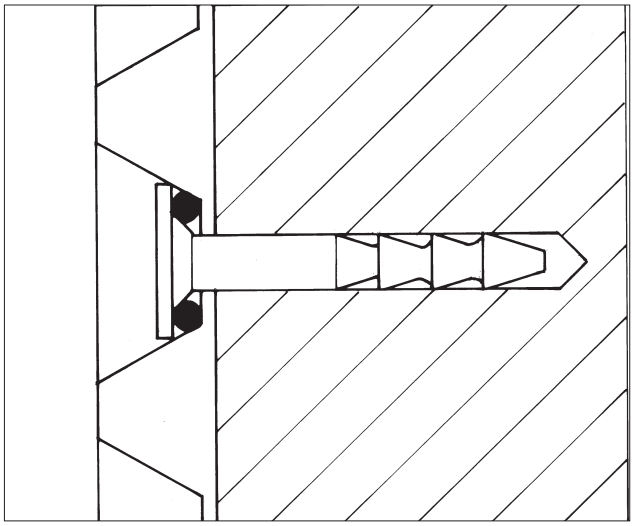

2 Manufacture

2.1 The membranes are formed in a continuous process in which high-density polyethylene (HDPE) is extruded into sheets and the stud impressions formed.

2.2 As part of the assessment and ongoing surveillance of product quality, the BBA has:

- agreed with the manufacturer the quality control procedures and product testing to be undertaken
- assessed and agreed the quality control operated over batches of incoming materials
- monitored the production process and verified that it is in accordance with the documented process
- evaluated the process for management of nonconformities
- checked that equipment has been properly tested and calibrated
- undertaken to carry out the above measures on a regular basis through a surveillance process, to verify that the specifications and quality control operated by the manufacturer are being maintained.

2.3 The management system of Isola AS Platon Factory has been assessed and registered as meeting the requirements of BS EN ISO 9001 : 2008 by DNV (Certificate QSC – 6064).

3 Delivery and site handling

3.1 The membranes are delivered to site in wrapped rolls bearing the product and manufacturer's name and the BBA logo bearing the number of this Certificate.

3.2 Rolls should be stored on end, under cover and protected from sharp objects, sunlight and high temperatures.

Assessment and Technical Investigations

The following is a summary of the assessment and technical investigations carried out on Platon P20.

Design Considerations

4 Use

4.1 Platon P20 is satisfactory for use as a damp-proof membrane on internal faces of walls and floors of all types of existing construction that require a large air gap for a high drainage volume. It can support a dry lining, screed or flooring in the following situations:

- on damp walls and floors in underground situations subject to high groundwater levels and perennial moisture
- in conjunction with a remedial dpc system where the walls and floors have a high salt content, and/or it is necessary to complete the installation immediately without allowing a period for initial drying
- over walls and floors which have a friable or painted surface, are contaminated (eg with oil or mould) or have a high salt content
- as a waterproofing membrane in areas subject to vibration.

4.2 Depending on the application required and the site conditions, the membrane may be used as:

- an underfloor damp-proof membrane
- a dry-lining for walls, vented into the room via aeration slots at the top and bottom of the wall

- a sealed system covering floor and/or wall used in conjunction with Platon P8 (or other suitable Platon membrane which is the subject of other Product Sheets of this Certificate) on the ceiling and/or wall, with provision made for disposing of water build-up behind the membrane via a sump and pump.

4.3 The membrane has not been assessed for use in chemically contaminated areas, such as brownfield sites.

4.4 The membrane consists of 0.9 mm thick HDPE and, in the opinion of the BBA, meets the requirement for a radon barrier according to BRE Report (BR 211 : 2007) *Radon : guidance on protective measures for new buildings*. However, the effectiveness of the joint sealing system used with Platon P20 has not been assessed against radon by the BBA and is outside the scope of this Certificate.

4.5 The system is satisfactory for use in Type C (drained protection) structural concrete constructions in accordance with BS 8102 : 2009.

4.6 Under normal operating conditions the membrane is not affected by underfloor heating.

5 Practicability of installation

The product is designed to be installed by competent specialist contractors experienced with damp-proofing work.

6 Resistance to water and water vapour

6.1 The membrane is water resistant and has a high resistance to water vapour transmission. However, the product as installed is not resistant to hydrostatic pressure and, consequently, the measures described in the *Installation* part of this Certificate must be followed to ensure that the membrane acts as a drainage layer with no excessive build-up of water behind it.

6.2 All joints and fixings must be sealed with Platon sealing products, and drainage channels and gullies or sumps and pumps should be installed as necessary to disperse excess or standing water.

7 Risk of condensation

7.1 As with any room, there is a need to control the generation and dispersal of moisture in the internal environment and to select appropriate and robust designs to minimise the risk of both surface and interstitial condensation, especially where insulation is used over the membrane.

7.2 In common with most waterproofing membranes, the product has a very high resistance to vapour diffusion, and when placed on the cold side of a construction may increase the risk of interstitial condensation. A calculation should be carried out to BS 5250 : 2011 and designers should consider appropriate techniques for managing the safe egress of moisture vapour with care (such as control of the internal room environment or use of a vapour control layer on the warm side of the insulation), and in particular the effect of moisture on any materials at or in contact with materials below the local dew-point.

8 Resistance to salt transfer

The product provides an effective barrier to the transmission of salts or other contaminants from the substrate.

9 Resistance to puncture, impact and loading

9.1 The membrane has a high resistance to puncture and will not be damaged by normal foot traffic during installation or while laying concrete or screeding to BS 8204-1 : 2003 + A1 : 2009.

9.2 The membrane can support the long-term imposed loadings defined in the National Annex to BS EN 1991-1-1 : 2002, Table NA.2, categories A to D, without undue deformation.

10 Wall-mounted fittings

Wall-mounted fittings (apart from lightweight items such as framed pictures) should be fixed where possible into battens, the position and number of support fixings into the loadbearing structure of which are predetermined. Only in exceptional circumstances should fittings be fixed through the membrane and lining board to the loadbearing structure behind, using proprietary fixings. Holes made in the membrane must be filled with a flexible sealant, such as Platon Sealer or Platon Sealing Rope or Tape.

11 Maintenance

11.1 As the membrane is confined within a wall or floor space and has suitable durability (see section 12), maintenance is not required.

11.2 Regular maintenance of all gullies, sumps and pumps must be conducted to ensure that a build-up of water does not occur behind the membrane.

12 Durability

Under normal conditions of use, the product will provide an effective barrier to the transmission of salts, liquid water and water vapour for the life of the structure in which it is incorporated.

13 Reuse and recyclability

The product comprises polyethylene, which can be recycled.

Installation

14 Survey

14.1 Where the area to be treated is below ground, or where conditions are damp, a full survey by a specialist waterproofing surveyor is necessary to diagnose the cause and to establish if treatment is required.

14.2 If rising damp to above-ground elevations is found, a remedial treatment is conducted in accordance with the relevant Agrément Certificate, BS 6576 : 2005 and the Property Care Association *Code of Practice for Installation of Remedial Damp-proof Courses in Masonry Walls*.

14.3 Appropriate remedial measures are taken to rectify major causes of damp conditions or water ingress, and to repair structural defects.

15 Surface preparation

15.1 When used in new constructions the concrete base must be laid in accordance with BS 8204-1 : 2003.

15.2 If a board covering is to be laid directly on the membrane, the concrete base must have a surface regularity with a maximum permissible departure of 5 mm from the underside of a 2 m straight edge, resting in contact with the floor in accordance in BS 8204-1 : 2003 + A1 : 2009.

15.3 Any unsound plaster, render or screed should be removed to expose the substrate which is then cleaned with a stiff brush to remove loose material, laitance, salt residue, mould or adhesive. If mould is present the substrate should be treated with a fungicidal wash. The Certificate holder can advise on suitable materials and procedures to be used.

15.4 Uneven substrates should be dubbed out with a cement-sand (1:4) render or screed, to the tolerance described in section 15.2. They should be allowed to set before the membrane is fixed.

16 Procedure

General

16.1 Platon P20 may be used in combination with any of the appropriate Platon membranes which are the subject of other Product Sheets of this Certificate.

Walls

16.2 Installation of the membrane is commenced at the top of the construction. For horizontal joints, the lower membrane is always positioned in front of the upper membrane. Membrane from rolls should be overlapped by 2 studs and sealed using Platon Sealing Rope placed between the two rows of studs. Membrane from sheets should be overlapped by one stud and sealed using Platon Overtape applied with equal overlap on the two membranes.

16.3 Alternatively, for vertical joints only, the membrane can be fixed flush and the joints sealed with Platon Overtape.

16.4 Fixings are made through the membrane into 10 mm holes drilled through the studs. Platon Brick Plugs, to which Platon Sealing Rope has been applied around the rim, are inserted into the holes and tapped flush with the membrane. The Platon Sealing Rope forms a sealing gasket between the plug and membrane.

16.5 Preservative-treated timber battens of minimum dimensions 25 mm by 38 mm are fixed into the plug's fixing hole using suitable screws with a maximum screwing-in depth of 25 mm plus the batten depth. If required, Platon Sealer is injected into the fixing holes to reduce the risk of water penetration. The membrane can also be dry-lined, using free-standing framework, blockwork or similar.

16.6 Spacings between fixings will depend on the method of dry lining to be applied. When using preservative-treated timber battens the fixings should be kept to a maximum of 600 mm. Proprietary metal fast track systems and independent frame systems will require fewer fixings, but sufficient should be used to ensure that the membrane is reasonably tight to the wall, especially at corners.

16.7 The membrane is installed over windows and then cut away to expose them. For doors and other obstructions, the membrane is installed up to the perimeter. In both cases, the gaps are sealed with Platon Overtape.

16.8 Power cables, points and light switches should preferably be remounted in front of the membrane.

16.9 In below-ground installations, the practice of leaving the top of the wall membrane unsealed where there is no requirement for a ceiling membrane to be installed may need to be reconsidered in cases where ingress of gases, odours or vermin is a consideration (such as in proximity to food preparation areas). The advice of the Certificate holder should be sought in these situations.

16.10 In above-ground installations, the build-up of water vapour behind the membrane is controlled by venting into the room. To facilitate this, the membrane is installed with a 10 mm gap at the top and a 20 mm gap at the bottom of the wall. Spacers measuring 3 mm by 200 mm are fixed at 600 mm centres behind the skirting board and ceiling coving to ensure a ventilation gap (see Figure 3). Alternatively, a proprietary ventilated skirting board or ceiling coving may be used.

Figure 3 Wall detail with dry lining

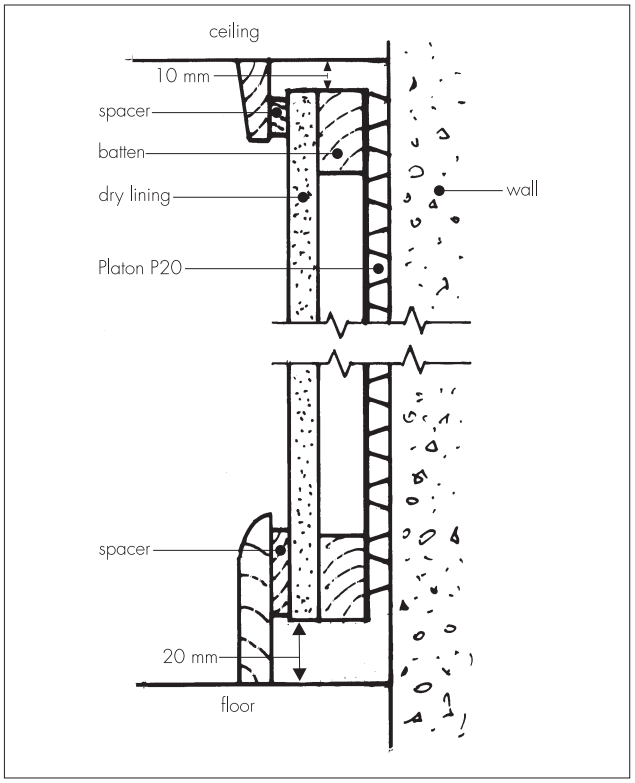

Floors

16.11 Floors should have a drainage outlet point. There should be a fall towards the outlet point or a drainage channel made around the perimeter of the floor, to ensure water can flow to the outlet.

16.12 The membrane is rolled out 'studs down' over the floor, and consecutive membrane widths are laid so an overlap of two interlocking studs is achieved. Membrane from rolls should be overlapped by 2 studs and sealed using Platon Sealing Rope placed between the two rows of studs. Membrane from sheets should be overlapped by one stud and sealed using Platon Overtape applied with equal overlap on the two membranes.

16.13 The membrane is cut within 5 mm to 10 mm of any pipes and services in the floor, and the gap filled with Platon Sealing Rope. A patch of membrane is overlaid and sealed to the service with Platon Sealing Rope, and its circumference sealed with Platon Sealing Tape or Platon Overtape.

16.14 Fixings must not be applied through the floor membrane.

16.15 Where appropriate at wall/floor junctions and corners of the installation, the membrane should be cut flush and the gap between the wall and floor membranes overlaid and sealed with Platon Overtape. Alternatively, where a wall membrane is not being installed the floor membrane may be turned up by 100 mm at the walls.

16.16 At corners, a cut is made and the membrane folded to form an edge-to-edge joint, then overlaid and sealed with Platon Overtape.

17 Dry lining of walls

17.1 Gypsum plasterboard to BS EN 520 : 2004, or similar dry lining boards covered by a current Agrément Certificate, are fixed to the battens with galvanized screws or nails, positioned a minimum of 12 mm from the edge of the board. Care should be taken to ensure that penetration of the plasterboard by screws or nails is less than batten depth to avoid puncturing the membrane.

17.2 Alternatively, linings can be free-standing framework, blockwork or similar. Where necessary these should be tied back by fixing into the Platon Brick Plug's fixing hole. Platon Sealer may be injected into the fixing hole to reduce the risk of water penetration.

18 Floor membrane coverings

18.1 If required, extruded closed-cell polystyrene insulation boards (minimum density 30 $kg \cdot m^{-3}$) are laid over the membrane.

18.2 The membrane is covered by reinforced concrete or screed at least 65 mm thick, in accordance with BS 8204-1 : 2003. Care should be taken to ensure the membrane is not displaced when placing the concrete or screed over the membrane.

18.3 Alternatively, the studs should be filled with dried sand, and then suitable tongue-and-groove panels should be selected in accordance with BS EN 12871 : 2001 and loose-laid over the membrane to within 10 mm of the walls. The panels are staggered and the joints sealed with a thermoplastic wood adhesive to BS EN 204 : 2001.

Technical Investigations

19 Tests

Tests were carried out on Platon P20, and the results assessed, to determine:

- thickness
- short-term compression resistance
- resistance to long-term loading
- nail tear resistance
- puncture resistance.

20 Investigations

20.1 The manufacturing process and quality control procedures were evaluated and details obtained of the quality and composition of materials used.

20.2 A reassessment was made of the data on which previous Certificate 92/2835 was based.

20.3 An assessment was made of the scope of use and durability of the product in relation to the generic properties of the membrane.

Bibliography

BS 5250 : 2011 *Code of practice for control of condensation in buildings*

BS 6576 : 2005 *Code of practice for diagnosis of rising damp in walls of buildings and installation of chemical damp-proof courses*

BS 8102 : 2009 *Code of practice for protection of below ground structures against water from the ground*

BS 8204-1 : 2003 + Amendment 1 : 2009 *Screeds, bases and in-situ floorings — Concrete bases and cement sand levelling screeds to receive floorings — Code of practice*

BS EN 204 : 2001 *Classification of thermoplastic wood adhesives for non-structural applications*

BS EN 520 : 2004 *Gypsum plasterboards — Definitions, requirements and test methods*

BS EN 12871 : 2010 *Wood-based panels — Performance specifications and requirements for load bearing boards for use in floors, walls and roofs*

NA to BS EN 1991-1-1 : 2002 *UK National Annex to Eurocode 1 : Actions on structures — General actions— Densities, self-weight, imposed loads for buildings*

BS EN 13967 : 2012 *Flexible sheets for waterproofing — Plastic and rubber damp proof sheets including plastic and rubber basement tanking sheet — Definitions and characteristics*

BS EN ISO 9001 : 2008 *Quality management systems — Requirements*

Property Care Association COP09 *Code of Practice for Installation of Remedial Damp-proof Courses in Masonry Walls*

21 Conditions

21.1 This Certificate:

- relates only to the product/system that is named and described on the front page
- is issued only to the company, firm, organisation or person named on the front page — no other company, firm, organisation or person may hold or claim that this Certificate has been issued to them
- is valid only within the UK
- has to be read, considered and used as a whole document — it may be misleading and will be incomplete to be selective
- is copyright of the BBA
- is subject to English Law.

21.2 Publications, documents, specifications, legislation, regulations, standards and the like referenced in this Certificate are those that were current and/or deemed relevant by the BBA at the date of issue or reissue of this Certificate.

21.3 This Certificate will remain valid for an unlimited period provided that the product/system and its manufacture and/or fabrication, including all related and relevant parts and processes thereof:

- are maintained at or above the levels which have been assessed and found to be satisfactory by the BBA
- continue to be checked as and when deemed appropriate by the BBA under arrangements that it will determine
- are reviewed by the BBA as and when it considers appropriate.

21.4 The BBA has used due skill, care and diligence in preparing this Certificate, but no warranty is provided.

21.5 In issuing this Certificate, the BBA is not responsible and is excluded from any liability to any company, firm, organisation or person, for any matters arising directly or indirectly from:

- the presence or absence of any patent, intellectual property or similar rights subsisting in the product/system or any other product/system
- the right of the Certificate holder to manufacture, supply, install, maintain or market the product/system
- actual installations of the product/system, including their nature, design, methods, performance, workmanship and maintenance
- any works and constructions in which the product/system is installed, including their nature, design, methods, performance, workmanship and maintenance
- any loss or damage, including personal injury, howsoever caused by the product/system, including its manufacture, supply, installation, use, maintenance and removal
- any claims by the manufacturer relating to CE marking.

21.6 Any information relating to the manufacture, supply, installation, use, maintenance and removal of this product/system which is contained or referred to in this Certificate is the minimum required to be met when the product/system is manufactured, supplied, installed, used, maintained and removed. It does not purport in any way to restate the requirements of the Health and Safety at Work etc. Act 1974, or of any other statutory, common law or other duty which may exist at the date of issue or reissue of this Certificate; nor is conformity with such information to be taken as satisfying the requirements of the 1974 Act or of any statutory, common law or other duty of care.

British Board of Agrément
Bucknalls Lane
Watford
Herts WD25 9BA

tel: 01923 665300
fax: 01923 665301
e-mail: mail@bba.star.co.uk
website: www.bbacerts.co.uk

Product Data Sheet

PLATON PLASTER BASE

Platon PLASTER BASE
is a studded cavity drain membrane for use in waterproofing or damp-proofing specification.
The unique patented undercut stud is dovetail shaped, this provides a physical key for plaster and render or allows for the direct application of plasterboard on adhesive dabs.
This is of particular benefit where space constraints prevent the use of timber or metal frame drylining, the installation of a blockwork liner wall or where a direct render or plaster finish is preferred, e.g. a vaulted ceiling.

Platon PLASTER BASE can be used to deal with and provide isolation from, rising or penetrating damp, salt contamination and running water (when used in conjunction with Triton Aquachannel, P20 or P8 floor membranes and Aqua Pump Pro Sumps and pumps).

When used within a fully designed and specified waterproofing design, Platon Plaster Base can provide a Grade 3 environment, as laid out in BS8102:2009.

Platon PLASTER BASE is for use above or below ground and unlike wet or liquid applied forms of 'tanking' it can be worked on immediately after installation without waiting for drying or curing to occur.

BENEFITS OF PLASTER BASE
When compared with other forms of waterproofing**:**

- No extensive preparation of structure.
- Water is directed behind the membrane to a drain channel for gravity drainage or a sump for pumped discharge.
- Ingressing water is de-pressurized and managed within the system and not diverted to other areas.
- Complete freedom of choice of wall finishes.
- Rapid and straightforward installation.
- Impermeable to water and water vapour.
- Reliable 'Type C' Waterproofing.

Product Data Sheet

THE PRODUCT

Platon PLASTER BASE is manufactured from high-density polyethylene (HDPE) with a stud height of 5mm.
Plaster Base is supplied in rolls 2m x 20m and is clear/translucent in colour.
It is recommended for internal applications only. Platon Plaster Base can be used in conjunction with other Platon membranes, above or below ground.

INSTALLATION

Platon PLASTER BASE can be applied to retained sound renders, brickwork, blockwork, stone or concrete.
The quality and appearance of the applied finishes will be a direct reflection of the underlying substrate.

All surfaces must be of a sound, firm nature and any loose areas should be removed prior to application.
Uneven, loose, or soft brick/stonework may need to be dubbed out to level off and stabilise the background.
Retaining sound cement render can be a good option if the substrate underneath is known to be in poor condition.

Gypsum based plaster, wallpaper and any buried timber must be removed as these materials can deteriorate over time and in the presence of moisture.
Where necessary a fungicide wash should be applied to the wall surface.

Platon PLASTER BASE should not be used on floors.

Remove loose and soft plaster/render, wallpaper and embedded timbers.
Dub out voids, hollows and loose areas of masonry using a cement mortar.
Offer up the membrane, hollow studs facing into the room, and fix in place using sealed Plaster Plugs (use Platon Rope).

Pull the membrane as tightly as possible against the structure to minimise hollow areas behind as these can interfere with the application of plaster or plasterboard.

Use a minimum of 13 fixings per square metre, spaced out in a regular ‘diamond’ pattern no more than 250mm apart.
Drill through the membrane in the centre of a 4 stud cluster, rather than through the stud itself.
In some cases, additional fixings may be required in order to produce a stable and tight membrane layer.

Fit the membrane tightly into and around corners to avoid damage when applying finishes.

Platon PLASTER BASE is joined by overlapping adjacent sheets by a minimum of 2 studs.
Fix Platon Plaster Plugs as close as possible to the edge of the membrane.
Fixings should be made at 150mm centres along the joint.
Once all fixings are in place, clean the membrane surface thoroughly and ensure it is dry and free from dust.

Apply Platon Overtape along the joint with equal overlaps onto each sheet of membrane and press firmly into place.
If for some reason the membrane edges are in tension or are likely to try and pull apart, reinforce the joint with Platon Cornerstrip before applying the Overtape.

Refer to the Platon cavity membrane installation guide for further information.

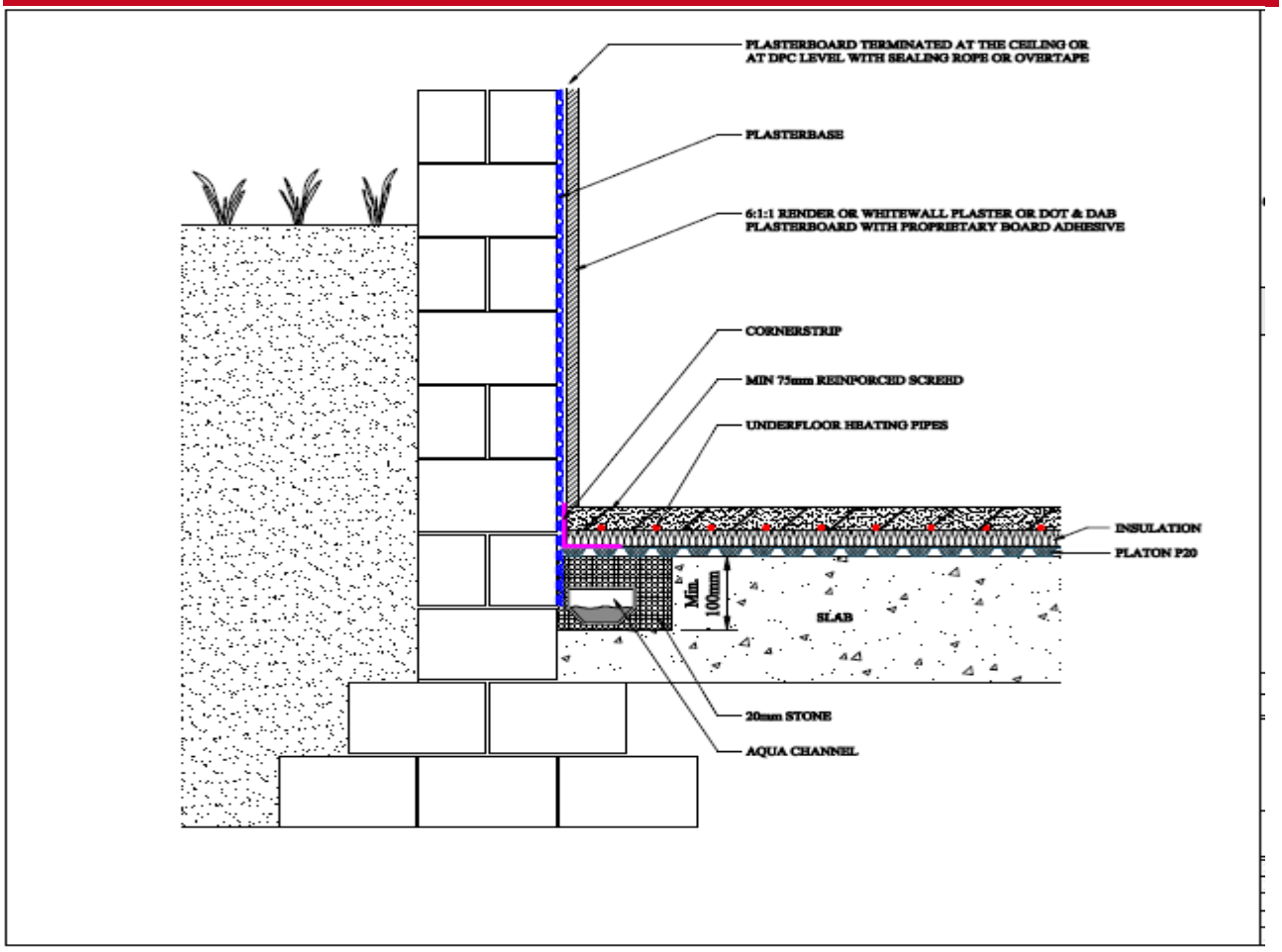

FINISHES

Most common lightweight and renovating plasters (Tarmac Whitewall) or sand/cement renders can be applied to **Platon PLASTER BASE**.
(The use of British Gypsum Hardwall or Tuff Coat is not recommended).
When using sand/cement renders, mixes of 1part cement to 6 parts washed plastering sand, incorporating either Triton SBR or hydrated lime should be used.
NB Grade 'M'; medium sharp sand should be used.
Do not use soft or building sand.

All renders/plasters should be applied in a minimum of two coats, allowing the 1st coat of 7mm – 10mm to be trowelled firmly into the membrane studs and then scratched to provide a key for subsequent coats to be applied.
The first scratch coat should be left to cure and harden. Ideally this should be 7 – 10 days depending on site & atmospheric conditions.

Do not allow the plaster or render to dry out too quickly or cracking may occur. The minimum plaster thickness should be 15mm and the maximum thickness (sand/cement 30mm) (lightweight plasters 40mm).

Plasterboard can be bonded using regular 'dab' adhesive or low expansion polyurethane foam adhesive.
Apply the adhesive over the heads of the fixing plugs and ensure that 50% of the membrane area is also covered.
This ensures that direct 'through' contact is made between the plasterboard and the masonry substrate.

Plasterboard fixed in this way can be skimmed the next day and painted or wallpapered a few days after that.
Drying times are very much reduced when compared to 'wet' systems.

DRAINAGE

If free water is present or there is a risk of it occurring, provision must be allowed for the water to flow to natural drainage or a sump and pump. (*BS8102:2009).*
Triton have a full range of Sumps and pumps, control panels and water level alarms and monitors.

ROLL SIZE AND ANCILLARIES

Rolls of: 2M x 20M
Plaster Plugs: box of 500 (at the rate of 13/M^2, 540 are used with a 40M^2 roll.
Platon Rope: 5M roll (one roll per 100 Plaster Plugs).
Platon Overtape: 25M roll (one roll per full size roll of Plaster Base.
Platon Cornerstrip: 10M roll, used as joint reinforcement.

TECHNICAL DATA

Membrane Material:	High Density Polyethylene.
Sheet thickness:	0.50 mm approximately.
Stud height:	5mm.
Roll weight:	19.2kg.
Air gap volume:	3.2L/M^2.
Drainage Capacity:	1.84L/M^2
Storage:	Rolls to be stored upright and under cover if possible.

NBS Clause: J40 (Flexible sheet tanking, damp proofing) 290

Triton Contact Details:

Triton Systems
Units 3-5 Crayford Commercial Centre, Greyhound Way, Crayford, Kent DA1 4HF

Tel: 01322 318830

Fax: 01322 524017

Email: info@tritonsystems.co.uk

www.tritonsystems.co.uk

DECLARATION OF PERFORMANCE

Referanse: Platon Plaster Base

Date: 2013 07 01 version 1
Identification of building product: see product packaging

Damp proof ventilating and drainage sheet / Ventilating and draining vapour control layer

NS-EN 13967:2012 / NS-EN 13984:2013 AVCP 2+	**Isola as** **N-3945** **Porsgrunn, Norway**

Notified body SINTEF, certificate no. 1071-CPR-1196/1197

Essential characteristics	Performance
Reaction to fire	Class F
Tensile strength properties (minimum)	
MD	220 N/50 mm
CMD	200 N/50 mm
Resistance to static loading, øtool= 10mm:	Pass at 20 kg
Resistance to impact, wtool= 500g (method A):	Pass at 0,35 m
Resistance to tearing (minimum)	210 N
Joint strength	45 N
Watertightness: Durability	Pass at 2kPa
After heat ageing	Pass
After chemical ageing	Pass
Water vapour resistance: Durability	380 m ± 25%
After heat ageing	Pass
Durability against alkali	Pass
Dangerous substances	None
Resistance to deformation under load (max.)	NPD*

* NPD – No Performance Declared

The performance of the product identified is in conformity with the declared performance above.
This declaration of performance is issued under the sole responsibility of the manufacturer.
Signed for and on behalf of the manufacturer by:

Name and Function	Place and date of issue	Signature
Richard I. Waterhouse, Quality Manager, Platon Factory.	Notodden 01.07.2013	

Isola AS, Platon Factory
Lienfossveien 5
N-3678 Notodden
Norway
Tel: 0047 3557 5700 Fax: 0047 3502 7555
e-mail: isola@isola.no
website: www.isola.com

Agrément Certificate
01/3823
Product Sheet 3

SYSTEM PLATON

PLATON PLASTER BASE

This Agrément Certificate Product Sheet[1] relates to Platon Plaster Base, a translucent high-density polyethylene (HDPE) membrane for damp-proofing walls and vaulted ceilings in new constructions or in existing buildings. It can be used above and below ground, over a contaminated or damp background, to support a plaster or render coat or dry lining on plaster dabs.

(1) Hereinafter referred to as 'Certificate'.

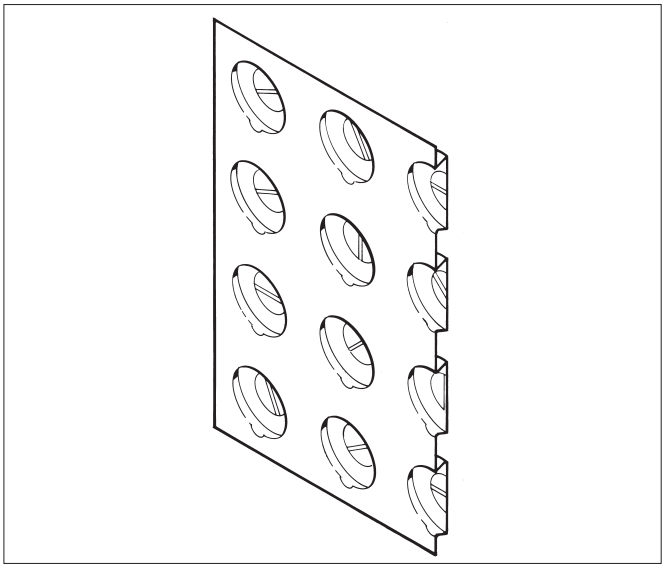

AGRÉMENT CERTIFICATION INCLUDES:

- factors relating to compliance with Building Regulations where applicable
- factors relating to additional non-regulatory information where applicable
- independently verified technical specification
- assessment criteria and technical investigations
- design considerations
- installation guidance
- regular surveillance of production
- formal three-yearly review.

KEY FACTORS ASSESSED

Resistance to water and water vapour — the membrane is water resistant and has a high resistance to water vapour transmission (see section 6).

Resistance to salt transfer — the membrane provides an effective barrier to the transmission of salts or other contaminants from the substrate (see section 8).

Resistance to impact — the membrane, plastered, rendered or dry-lined, has a satisfactory resistance to soft and hard body impacts (see section 9).

Durability — under normal conditions of use, the membrane will provide an effective barrier to the transmission of salts, liquid water and water vapour for the life of the structure in which it is incorporated (see section 12).

The BBA has awarded this Certificate to the company named above for the product described herein. This product has been assessed by the BBA as being fit for its intended use provided it is installed, used and maintained as set out in this Certificate.

On behalf of the British Board of Agrément

Date of Second issue: 2 December 2013

Originally certificated on 9 October 2001

Simon Wroe
Head of Approvals — Materials

Claire Curtis-Thomas
Chief Executive

The BBA is a UKAS accredited certification body — Number 113. The schedule of the current scope of accreditation for product certification is available in pdf format via the UKAS link on the BBA website at www.bbacerts.co.uk

Readers are advised to check the validity and latest issue number of this Agrément Certificate by either referring to the BBA website or contacting the BBA direct.

British Board of Agrément
Bucknalls Lane
Watford
Herts WD25 9BA
tel: 01923 665300
fax: 01923 665301
e-mail: mail@bba.star.co.uk
website: www.bbacerts.co.uk

Regulations

In the opinion of the BBA, Platon Plaster Base, if installed, used and maintained in accordance with this Certificate, will meet or contribute to meeting the relevant requirements of the following Building Regulations (the presence of a UK map indicates that the subject is related to the Building Regulations in the region or regions of the UK depicted):

The Building Regulations 2010 (England and Wales) (as amended)

Requirement:	C2(a)(b)	Resistance to moisture
Comment:		The product adequately resists the passage of moisture. See section 6.1 of this Certificate.
Regulation:	7	Materials and workmanship
Comment:		The product is acceptable. See section 12 and the *Installation* part of this Certificate.

The Building (Scotland) Regulations 2004 (as amended)

Regulation:	8(1)	Fitness and durability of materials and workmanship
Comment:		The product is acceptable. See section 12 and the *Installation* part of this Certificate.
Regulation:	9	Building standards applicable to construction
Standard:	3.3	Flooding and ground water
Comment:		The product can contribute to minimising or eliminating the effects of flooding on the building fabric and/or the building element, with reference to clause 3.3.1[(1)(2)]. See section 6.1 of this Certificate.
Standard:	3.4	Moisture from the ground
Comment:		The product adequately resists the passage of moisture with reference to clauses 3.4.1[(1)(2)], 3.4.2[(1)(2)], 3.4.5[(1)(2)], 3.4.6[(1)(2)] and 3.4.7[(1)(2)]. See section 6.1 of this Certificate.
Standard:	3.6(a)	Surface water drainage
Comment:		The product can contribute to satisfying this Standard, with reference to clause 3.6.3[(1)(2)]. See section 6.1 of this Certificate.
Standard:	3.10	Precipitation
Comment:		The product adequately resists the passage of moisture, with reference to clause 3.10.1[(1)(2)]. See section 6.1 of this Certificate.
Standard:	7.1(a)	Statement of sustainability
Comment:		The product can contribute to meeting the relevant Requirements of Regulation 9, Standards 1 to 6, and, therefore, will contribute to a construction meeting a bronze level of sustainability as defined in this Standard.
Regulation:	12	Building standards applicable to conversions
Comment:		All comments given for this product under Regulation 9, Standards 1 to 6, also apply to this Regulation, with reference to clause 0.12.1[(1)(2)] and Schedule 6[(1)(2)].

(1) Technical Handbook (Domestic).
(2) Technical Handbook (Non-Domestic).

The Building Regulations (Northern Ireland) 2012

Regulation:	23(a)(i)(iii)(b)(i)	Fitness of materials and workmanship
Comment:		The product is acceptable. See section 12 and the *Installation* part of this Certificate.
Regulation:	28(a)(b)	Resistance to moisture and weather
Comment:		The product adequately resists the passage of moisture. See section 6.1 of this Certificate.

Construction (Design and Management) Regulations 2007

Construction (Design and Management) Regulations (Northern Ireland) 2007

Information in this Certificate may assist the client, CDM co-ordinator, designer and contractors to address their obligations under these Regulations.

See section: 1 *Description* (1.2) of this Certificate.

Additional Information

NHBC Standards 2013

NHBC accepts the use of Platon Plaster Base, provided it is installed, used and maintained in accordance with this Certificate, in relation to *NHBC Standards*, Chapters 5.1 *Substructure and ground bearing floors* and 5.2 *Suspended ground floors*.

CE marking

The Certificate holder has taken the responsibility of CE marking the product in accordance with harmonised European Standards BS EN 13967 : 2012 and BS EN 13984 : 2013. An asterisk(*) appearing in this Certificate indicates that data shown are given in the manufacturer's Declaration of Performance.

Technical Specification

1 Description

1.1 Platon Plaster Base is a translucent, high-density polyethylene (HDPE) membrane, moulded to form undercut studs which act as a key to subsequently-applied plaster or render (see Figure 1).

Figure 1 Platon Plaster Base

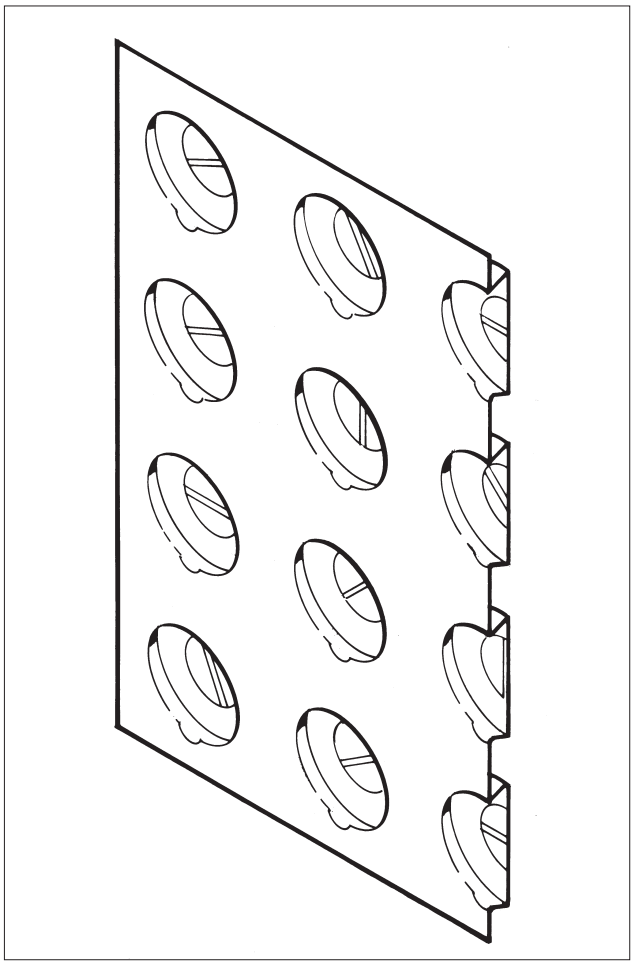

1.2 Platon Plaster Base is supplied in roll form, and has characteristics of:

thickness (mm)	0.5
stud height (mm)	5
weight per unit area ($kg \cdot m^{-2}$)	0.48
roll size (m)	2.0 x 20
weight of roll (kg)	19 approx
air gap volume ($l \cdot m^{-2}$)	4.

1.3 Ancillary materials used with the membrane include:

- Platon Plaster Plug — a plastic plug for fixing membrane to brick or stone. The plug has a pre-formed hole permitting timber fixings to be inserted without breaching the membrane (see Figure 2)
- Platon Sealing Rope — butyl rubber beading for sealing joints in the membrane and sealing the membrane around pipes and openings, and to form a gasket between the brick plug and membrane
- Platon Sealer — butyl rubber sealant for sealing the membrane around pipes and openings and at joints
- Platon Overtape — butyl rubber tape, at least 100 mm wide, backed with non-woven polypropylene, for sealing joints in the membrane, and for use around services, penetrations and edge details, and between wall and floor membranes
- standard metal edge lathing
- Triton Trimix 1 — a water- and salt-resistant additive for sand and cement renders.

Figure 2 Platon Plaster Plug

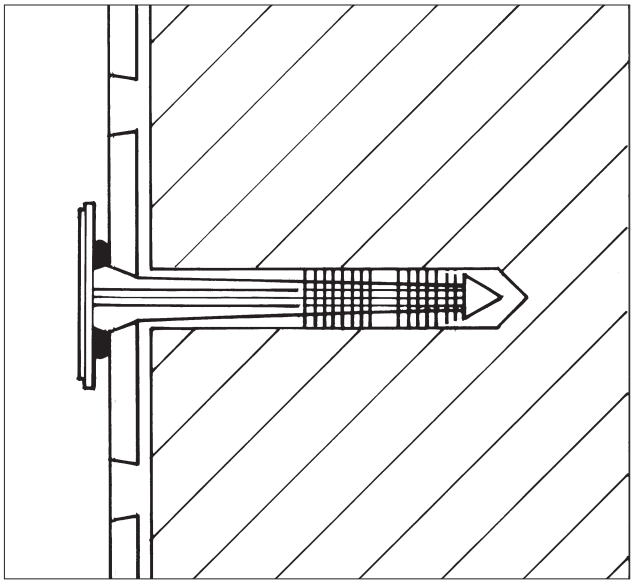

2 Manufacture

2.1 The membranes are formed in a continuous process in which high-density polyethylene (HDPE) is extruded into sheets and the stud impressions formed.

2.2 As part of the assessment and ongoing surveillance of product quality, the BBA has:

- agreed with the manufacturer the quality control procedures and product testing to be undertaken
- assessed and agreed the quality control operated over batches of incoming materials
- monitored the production process and verified that it is in accordance with the documented process
- evaluated the process for management of nonconformities
- checked that equipment has been properly tested and calibrated
- undertaken to carry out the above measures on a regular basis through a surveillance process, to verify that the specifications and quality control operated by the manufacturer are being maintained.

2.3 The management system of Isola AS Platon Factory has been assessed and registered as meeting the requirements of BS EN ISO 9001 : 2008 by DNV (Certificate QSC – 6064).

3 Delivery and site handling

3.1 The membranes are delivered to site in wrapped rolls bearing the product and manufacturer's name and the BBA logo bearing the number of this Certificate.

3.2 Rolls should be stored on end, under cover and protected from sharp objects, sunlight and high temperatures.

Assessment and Technical Investigations

The following is a summary of the assessment and technical investigations carried out on Platon Plaster Base.

Design Considerations

4 Use

4.1 Platon Plaster Base is satisfactory for use as a damp-proof membrane on internal walls and vaulted ceilings, above and below ground, in new construction or in existing buildings over a contaminated or damp background. It can support plastering, rendering or a dry lining fixed by plaster dabs (where appropriate) in the following situations:

- on damp walls in underground situations subject to high groundwater levels and perennial moisture
- on vaulted ceilings of archways or cellars subject to water ingress
- in conjunction with a remedial dpc system where the walls have a high salt content and/or it is necessary to complete the installation immediately without allowing a period for initial drying
- over a wall which has a friable or painted surface, is contaminated (eg with oil or mould) or has a high salt content
- as a waterproofing membrane in areas subject to vibration.

4.2 Depending on the application required and the site conditions, the membrane may be used as:

- a dry-lining for walls, vented into the room via aeration slots at the top and bottom of the wall
- a sealed system covering wall and ceiling with provision made for disposing of water build-up behind the membrane via a sump and pump.

4.3 The membrane has not been assessed for use in chemically contaminated areas, such as brownfield sites.

4.4 The membrane consists of 0.5 mm thick HDPE and, in the opinion of the BBA, meets the requirement for a radon barrier according to BRE Report (BR 211 : 2007) *Radon : guidance on protective measures for new buildings*. However, the effectiveness of the joint sealing system used with Platon Plaster Base has not been assessed against radon by the BBA and is outside the scope of this Certificate.

4.5 The system is satisfactory for use in Type C (drained protection) structural concrete constructions in accordance with BS 8102 : 2009.

5 Practicability of installation

The product is designed to be installed by competent specialist contractors experienced with damp-proofing work.

6 Resistance to water and water vapour

6.1 The membrane is water resistant and has a high resistance to water vapour transmission. However, the product as installed is not resistant to hydrostatic pressure and, consequently, the measures described in the *Installation* part of this Certificate must be followed to ensure that, where the surface is damp, there is a flow of air across it, or that the membrane acts as a drainage layer and that there is no excessive build up of water behind it.

6.2 All joints and fixings must be sealed with Platon sealing products, and drainage channels and gullies or sumps and pumps should be installed as necessary to disperse excess or standing water.

7 Risk of condensation

As with any room, there is a need to control the generation and dispersal of moisture in the internal environment and to select appropriate and robust designs to minimise the risk of both surface and interstitial condensation. The product has a very high resistance to vapour diffusion and this should be taken into account in any calculation of condensation risk.

8 Resistance to salt transfer

The product provides an effective barrier to the transmission of salts or other contaminants from the substrate.

9 Resistance to impact

The membrane, plastered, rendered or dry-lined, has a satisfactory resistance to soft and hard body impacts.

10 Wall-mounted fittings

Wall-mounted fittings (apart from lightweight items such as framed pictures) should be fixed (using recommended proprietary fixings) through the membrane and lining board, plaster or render to the loadbearing structure behind. Holes made in the membrane must be filled with a flexible sealant, such as Platon Sealer or Platon Sealing Rope before inserting the fixing.

11 Maintenance

11.1 As the membrane is covered by plaster, render or plasterboard and has suitable durability (see section 12), maintenance is not required.

11.2 Regular maintenance of all gullies, sumps and pumps must be conducted to ensure that a build-up of water does not occur behind the membrane.

12 Durability

Under normal conditions of use, the product will provide an effective barrier to the transmission of salts, liquid water and water vapour for the life of the structure in which it is incorporated.

13 Reuse and recyclability

The product comprises polyethylene, which can be recycled.

Installation

14 Survey

14.1 Where the area to be treated is below ground, or where conditions are damp, a full survey by a specialist waterproofing surveyor is necessary to diagnose the cause and to establish if treatment is required.

14.2 If rising damp to above-ground elevations is found, a remedial treatment is conducted in accordance with the relevant Agrément Certificate, BS 6576 : 2005 and the Property Care Association *Code of Practice for Installation of Remedial Damp-proof Courses in Masonry Walls*.

14.3 Appropriate remedial measures are taken to rectify major causes of damp conditions or water ingress and to repair structural defects.

15 Surface preparation

15.1 Any unsound plaster or render is removed to expose the substrate which is then cleaned with a stiff brush to remove any loose material, laitance, salt residue, mould or adhesive. If mould is present the substrate should be treated with a fungicidal wash. The Certificate holder can advise on suitable materials and procedures to be used.

15.2 Uneven substrates should be dubbed out with a cement-sand (1:4) render to achieve a flat finish, and allowed to set before fixing the membrane.

16 Procedure

General

16.1 Platon Plaster Base may be used in combination with any of the appropriate Platon membranes which are the subject of other Product Sheets of this Certificate.

16.2 The membrane should always be used with the lower sheet placed in front of the higher sheet with a minimum overlap of two studs. The lap is made secure by the use of Platon Plaster Plugs fixed as close as possible to the edge of the membrane, at 150 mm centres along the joint. The overlap is then wiped clean of dust and sealed with 100 mm wide Platon Overtape applying equal overlap areas to each sheet of membrane.

16.3 Fixings are made through the spacing between four studs (not through the studs) into holes drilled through the membrane into the substrate. Platon Plaster Plugs, to which Platon Sealing Rope has been applied around the rim, are inserted into the holes and tapped flush with the membrane.

16.4 On difficult substrates, the translucence of the membrane allows the contractor to view the substrate through the membrane and choose the optimum site for each fixing.

16.5 Fixings are made in a diamond pattern at a minimum number of 13 per square metre, and a maximum spacing of 300 mm.

Ceilings

16.6 Ceilings to be covered must always have a fall, as per vaulted cellar constructions, to ensure water does not build up against the membrane or a joint. The vertical drop between the ends of two membrane sheets for horizontal overlaps should be a minimum of 100 mm.

16.7 Any sagging of the membrane between fixing points should not be great enough for ponding to occur.

16.8 At the end walls of vaulted constructions the membrane must be turned down onto the end wall by a minimum of 300 mm (ie nine studs). The membrane is mitred as necessary to fit the curve of the ceiling, and the joint sealed with Platon Overtape. The wall membrane should be cut to fit the curve of the ceiling and fixed in front of the ceiling membrane, and the gap sealed with Platon Sealing Tape or Rope or Platon Sealer.

Walls

16.9 Installation of the membrane is commenced at the top of the construction. Joints are made by overlapping the membrane by a minimum of two studs.

16.10 Power cables, points and light switches should preferably be remounted in front of the membrane.

16.11 The membrane is installed over windows and then cut away to expose them. For doors and other obstructions, the membrane is installed up to the perimeter. In both cases, the gaps are sealed with Platon Sealing Rope.

16.12 Power cables, points and light switches preferably should be remounted in front of the membrane.

16.13 In above-ground applications, where the system is not sealed, standard metal edge lathing is fixed at the top and bottom of the membrane to maintain a 10 mm gap at wall/ceiling and a 20 mm gap at wall/floor junctions. Spacers measuring 3 mm by 200 mm are fixed at 600 mm centres behind the skirting board and ceiling coving to ensure a ventilation gap (see Figure 3). Alternatively, a proprietary ventilated skirting board or ceiling coving may be used.

Figure 3 Wall detail with plaster lining

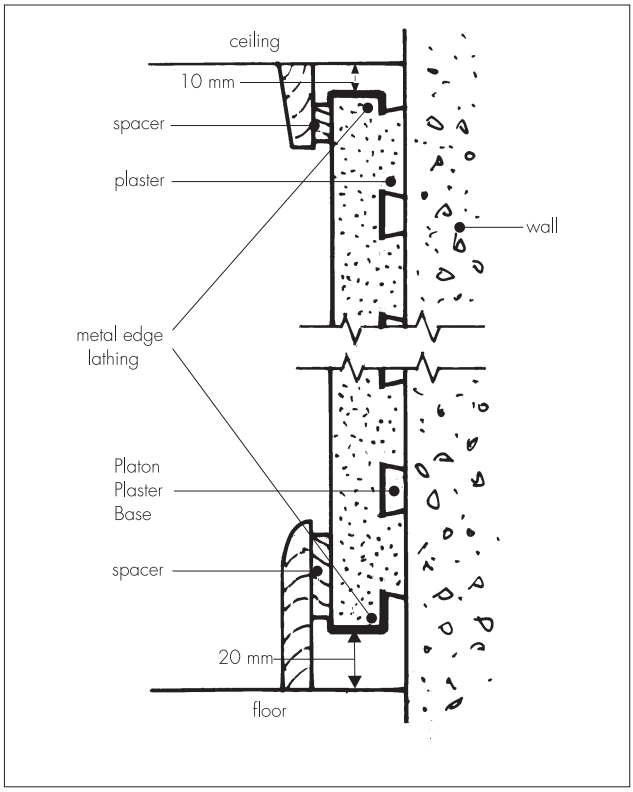

17 Plastering

17.1 Most common lightweight plasters, renovating plasters and one-coat plasters can be applied to Platon Plaster Base using the procedures defined in BS EN 13914-2 : 2005 and/or the appropriate Agrément Certificate. When using sand/cement render, a mix of one part cement to six parts sand should be used, incorporating a plasticiser such as Triton Trimix 1 (Trimix 1 is added to the gauging water at the ratio of 1:24). Where appropriate the recommendations of the Certificate holder should be followed.

17.2 The plaster should be a minimum total depth of 15 mm.

18 Dry lining of walls

18.1 A gypsum-based drywall adhesive to BS EN 14496 : 2005 is mixed and applied to the membrane in accordance with BS 8212 : 1995. The total area of contact between the adhesive and board surface should not be less than 20% of the board area.

18.2 Gypsum plasterboard to BS EN 520 : 2004, or similar dry lining boards covered by a current Agrément Certificate, are pressed onto the plaster dabs and jointed in the usual manner. Temporary spacers approximately 20 mm to 25 mm high are positioned under the dry lining to support it during the curing period.

19 Finishing works

19.1 The plastered membrane can accept permanent decoration, such as vinyl papers or oil paint. Temporary permeable decoration (necessary when a remedial dpc installation is replastered conventionally) is not necessary.

19.2 Once the plastered, dry-lined or rendered surface has dried, the surface can be painted or wallpapered using traditional methods and materials.

Technical Investigations

20 Tests

Tests were carried out to on Platon Plaster Base and the results assessed to determine:

- nail tear resistance
- thickness
- impact resistance of plastered, rendered and dry-lined membrane.

21 Investigations

21.1 The manufacturing process was evaluated, including the methods adopted for quality control, and details were obtained of the quality and composition of the materials used.

21.2 Trial installations were conducted to assess the practicability of installation of the product and the methods used for plastering, rendering and dry lining.

21.3 An assessment was made of the scope of use and durability of the product in relation to the generic properties of the membrane.

Bibliography

BS 6576 : 2005 *Code of practice for diagnosis of rising damp in walls of buildings and installation of chemical damp-proof courses*

BS 8102 : 2009 *Code of practice for protection of below ground structures against water from the ground*

BS 8212 : 1995 *Code of practice for dry lining and partitioning using gypsum plasterboard*

BS EN 520 : 2004 *Gypsum plasterboards — Definitions, requirements and test methods*

BS EN 13914-2 : 2005 *Design, preparation and application of external rendering and internal plastering — Design considerations and essential principles for internal plastering*

BS EN 14496 : 2005 *Gypsum based adhesives for thermal/acoustic insulation composite panels and plasterboards —Definitions, requirements and test methods*

BS EN 13967 : 2012 *Flexible sheets for waterproofing — Plastic and rubber damp proof sheets including plastic and rubber basement tanking sheet — Definitions and characteristics*

BS EN 13984 : 2013 *Flexible sheets for waterproofing — Plastic and rubber vapour control layers — Definitions and characteristics*

BS EN ISO 9001 : 2008 *Quality management systems — Requirements*

Property Care Association COP09 *Code of Practice for Installation of Remedial Damp-proof Courses in Masonry Walls*

22 Conditions

22.1 This Certificate:

- relates only to the product/system that is named and described on the front page
- is issued only to the company, firm, organisation or person named on the front page — no other company, firm, organisation or person may hold or claim that this Certificate has been issued to them
- is valid only within the UK
- has to be read, considered and used as a whole document — it may be misleading and will be incomplete to be selective
- is copyright of the BBA
- is subject to English Law.

22.2 Publications, documents, specifications, legislation, regulations, standards and the like referenced in this Certificate are those that were current and/or deemed relevant by the BBA at the date of issue or reissue of this Certificate.

22.3 This Certificate will remain valid for an unlimited period provided that the product/system and its manufacture and/or fabrication, including all related and relevant parts and processes thereof:

- are maintained at or above the levels which have been assessed and found to be satisfactory by the BBA
- continue to be checked as and when deemed appropriate by the BBA under arrangements that it will determine
- are reviewed by the BBA as and when it considers appropriate.

22.4 The BBA has used due skill, care and diligence in preparing this Certificate, but no warranty is provided.

22.5 In issuing this Certificate, the BBA is not responsible and is excluded from any liability to any company, firm, organisation or person, for any matters arising directly or indirectly from:

- the presence or absence of any patent, intellectual property or similar rights subsisting in the product/system or any other product/system
- the right of the Certificate holder to manufacture, supply, install, maintain or market the product/system
- actual installations of the product/system, including their nature, design, methods, performance, workmanship and maintenance
- any works and constructions in which the product/system is installed, including their nature, design, methods, performance, workmanship and maintenance
- any loss or damage, including personal injury, howsoever caused by the product/system, including its manufacture, supply, installation, use, maintenance and removal
- any claims by the manufacturer relating to CE marking.

22.6 Any information relating to the manufacture, supply, installation, use, maintenance and removal of this product/system which is contained or referred to in this Certificate is the minimum required to be met when the product/system is manufactured, supplied, installed, used, maintained and removed. It does not purport in any way to restate the requirements of the Health and Safety at Work etc. Act 1974, or of any other statutory, common law or other duty which may exist at the date of issue or reissue of this Certificate; nor is conformity with such information to be taken as satisfying the requirements of the 1974 Act or of any statutory, common law or other duty of care.

British Board of Agrément
Bucknalls Lane
Watford
Herts WD25 9BA

tel: 01923 665300
fax: 01923 665301
e-mail: mail@bba.star.co.uk
website: www.bbacerts.co.uk

Product Data Sheet

PLATON PB2 MESH MEMBRANE

DESCRIPTION

Platon PB2 Mesh Membrane is a thin (PP) cavity membrane developed specifically for use when damp-proofing above ground walls subject to rising damp, penetrating damp or salt contamination.

PB2 Mesh can be finished with plaster, render or plasterboard bonded using adhesive dabs.
Unlike wet or liquid applied forms of ‘tanking’, PB2 Mesh can be worked on immediately after installation without waiting for drying or curing to occur.
The return to use time of walls damp-proofed using PB2 Mesh is significantly less than for other methods.

USAGE

PB2 Mesh is unaffected by the presence of moisture or salts, making it ideal for use where conventional chemical injection damp-proofing and associated re-plastering might not work reliably or where penetrating dampness is the dominant problem.PB2 Mesh is ideal for:

- Barn or Mill Conversions
- Thick Random Stone Walls
- Contaminated chimney breasts
- Listed Buildings
- After chemical damp proofing.

The membrane can be applied to retained sound renders, brickwork, blockwork or stone, sometimes with minimal preparation when compared to waterproof rendering or ‘tanking’.
Existing paint or lime-wash can be retained.

The quality and appearance of the applied finishes will be a direct reflection of the underlying substrate. Uneven, loose or soft stonework may need to be dubbed out to level off and stabilise the background.
Retaining sound cement render can be a good option if the substrate underneath is known to be in poor condition.
Gypsum based plaster, wallpaper and any buried timber must be removed as these materials can deteriorate over time and in the presence of moisture.

PB2 Mesh can be used in conjunction with other Platon membranes and is particularly useful for lining window and door reveals where intrusion into the opening must be minimised.
PB2 Mesh is tough but pliable and is easily formed around internal and external corners.
When laying new solid floors, apply the PB2 Mesh to the walls first, then lap the floor dpm up in front of the Platon membrane. Seal as required and trim the dpm flush with the top of the finished floor.
PB2 Mesh is suitable for internal use only.

TECHNICAL DATA.

Membrane Material:	Polypropylene
Sheet thickness:	nominal 0.50mm
Stud height:	Approx. 2.0mm
Construction height:	Approx. 2.5mm
Unit weight:	0.505 kg/m²
Working temperature:	Max. +60°C
Softening temperature:	+160°C
Linear Coefficient of thermal expansion:	0.18mm/m°C
Water vapour resistance:	250 M equivalent air layer
Life Expectancy:	At least 50 years for defined applications.
Colour:	Clear / Translucent Mesh – White
Storage:	Rolls to be stored upright and under cover if possible.

INSTALLATION.

Platon PB2 Mesh is suitable for damp-proofing only.
See separate data sheets for Platon Membranes suitable for waterproofing works.

Remove loose and soft plaster/render, wallpapers and embedded timbers.
Dub out voids, hollows and loose areas of masonry using a cement mortar.
Offer up the membrane and fix in place using sealed Plaster Plugs (use Platon Rope or moulded Plaster Plug Seals).

Pull the membrane as tightly as possible against the structure to minimise hollow areas behind as these can interfere with the application of plaster or plasterboard.
Fit the membrane tightly into and around corners, again to avoid damage when applying finishes.
Use a minimum of 13 fixings per square metre, spaced out in a regular ‘diamond’ pattern.
In some cases, additional or alternative fixings, such as ‘cob’ plugs, may be required.
Adjacent pieces of PB2 Mesh are butted together (an overlap is not necessary), and sealed with Platon Overtape.

Finishes:
Tarmac Whitewall high impact plaster, sand and cement render (6:1 with SBR or 6:1:1 with hydrated lime) or renovating plaster are all suitable wet applied finishes.
A minimum of two coats should be applied.
The initial ‘scratch’ coat should be well worked into the mesh facing, the minimum thickness should be 6mm.
Allow to cure for 7-10 days before applying subsequent coats.

Do not allow the plaster or render to dry out too quickly or cracking may occur.
Apply no more than a total of 15mm of render or plaster.

Plasterboard can be bonded using regular ‘dab’ adhesive or low expansion polyurethane foam adhesive.
Apply the adhesive over the heads of the fixing plugs and ensure that 50% of the membrane area is also covered.
This ensures that direct ‘through’ contact is made between the plasterboard and the masonry substrate.
Plasterboard fixed in this way can be skimmed the next day and painted or wallpapered a few days after that.
Drying times are very much reduced when compared to ‘wet’ systems.

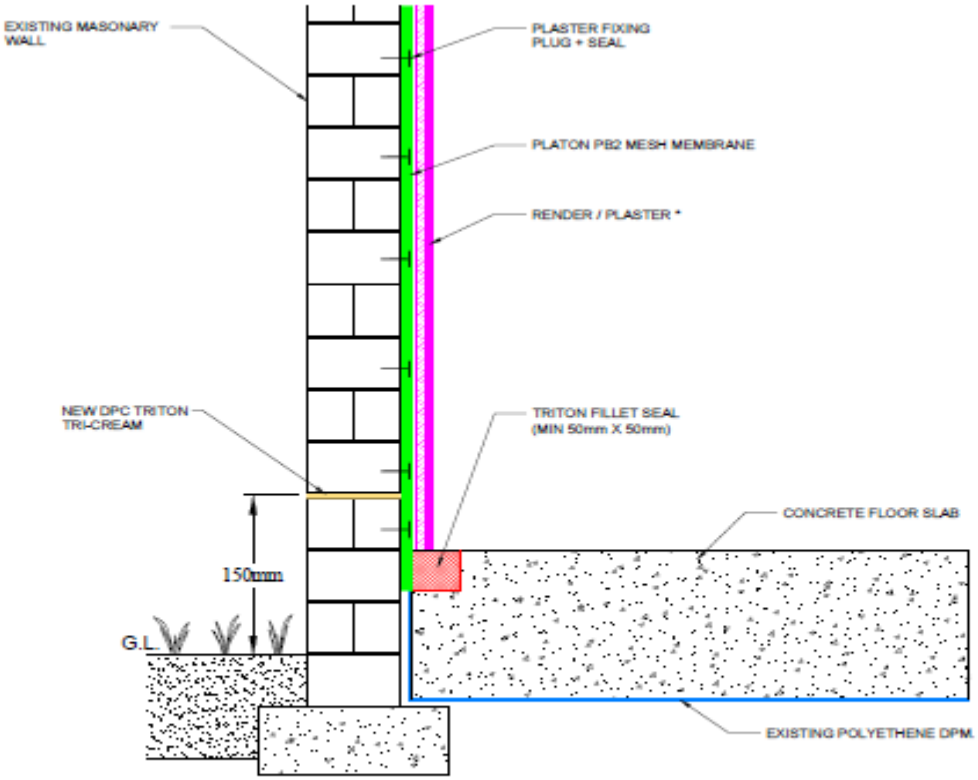

ROLL SIZES & ANCILLARIES.

Rolls of: 1.0m x 20m^2
2.0m x 20m^2
Plaster Plugs: box of 500 (at the rate of 13/M^2, 540 are used with a 40M^2 roll)
Platon Rope: 5M roll (one roll per 100 Plaster Plugs)
Plaster Plug Seals: bag of 100
Platon Overtape:25M roll (one roll per full size roll of PB2 Mesh)

CHEMICAL RESISTANCE.

Platon PB2 Mesh is unaffected by moisture, chemical salts or cement/concrete.

DELIVERY UNIT: Pallet rate = 16 x rolls/pallet

For further information, contact:
Triton Systems
Units 3 –5 Crayford Commercial Centre
Greyhound Way,
Crayford,
Kent.
DA1 4HF
Tel: 01322 318830 Fax: 01322 524017
www.tritonsystems.co.uk
info@tritonsystems.co.uk

DECLARATION OF PERFORMANCE

Referanse: Platon PB2 Mesh

Date: 2013 07 01 version 1
Identification of building product: see product packaging

Ventilating and draining vapour control layer

NS-EN 13984:2013 AVCP 3	**Isola as** **N-3945** **Porsgrunn, Norway**

Notified body SINTEF, certificate no. 1071-CPR-1197

Essential characteristics	Performance
Reaction to fire	Class F
Tensile strength properties (minimum)	
MD	370 N/50 mm
CMD	350 N/50 mm
Resistance to static loading, øtool= 10mm:	Pass at 20 kg
Resistance to impact, wtool= 500g (method A):	Pass at 0,25 m
Resistance to tearing (minimum)	NPD*
Joint strength	170 N
Watertightness: Durability	NPD*
Water vapour resistance: Durability	310 m ± 25%
After heat ageing	Pass
Durability against alkali	Pass
Dangerous substances	None
Resistance to deformation under load (max.)	NPD*

* NPD – No Performance Declared

The performance of the product identified is in conformity with the declared performance above.
This declaration of performance is issued under the sole responsibility of the manufacturer.
Signed for and on behalf of the manufacturer by:

Name and Function	Place and date of issue	Signature
Richard I. Waterhouse, Quality Manager, Platon Factory.	Notodden 01.07.2013	

Product Data Sheet

PLATON PLASTER MESH

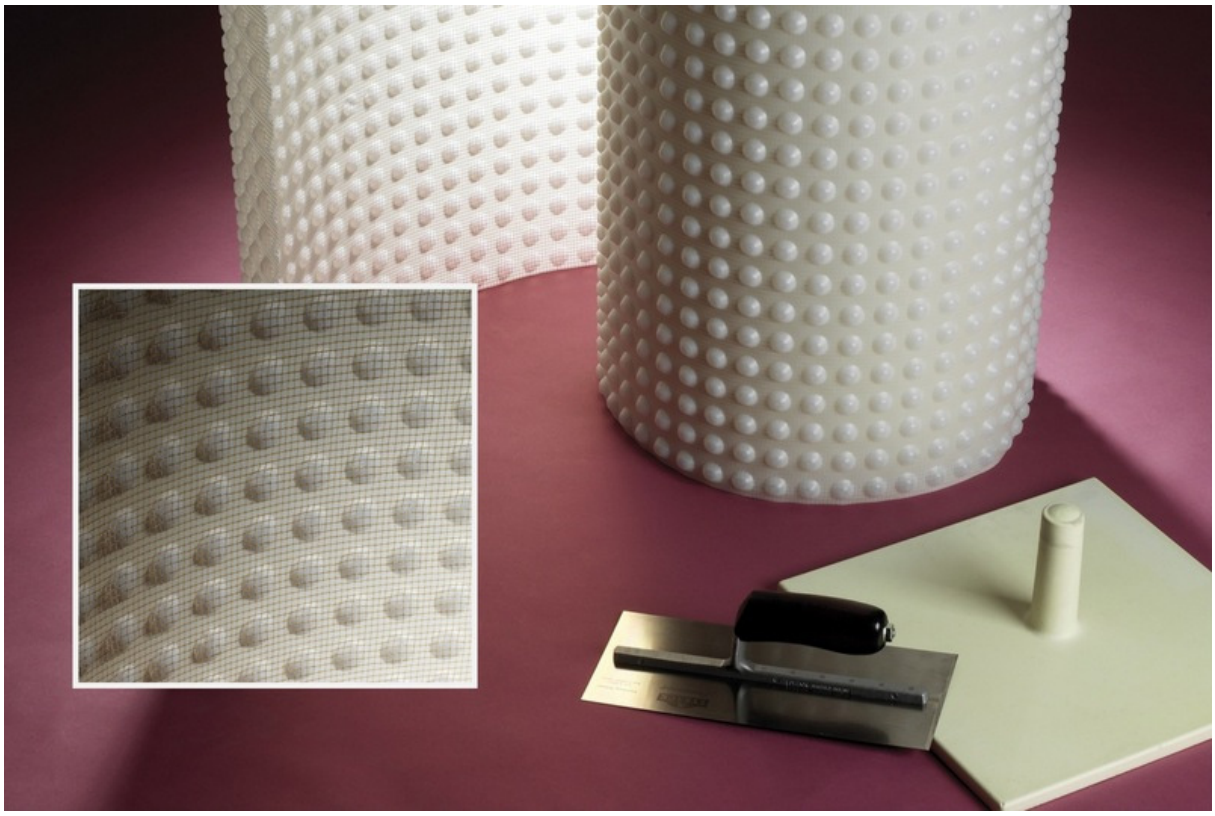

PLATON PLASTER MESH

is a dimpled sheet cavity drain membrane for use in waterproofing or damp-proofing specification.
The bonded mesh layer on the front of the membrane allows the direct application of plasterboard (on adhesive dabs), plaster or render.
This is of particular benefit where space constraints prevent the use of timber or metal frame drylining or the installation of a blockwork liner wall or where a direct render or plaster finish is preferred, e.g. a vaulted ceiling.
Plaster Mesh can be used to deal with and provide isolation from, rising or penetrating damp, salt contamination and running water (when used in conjunction with Triton Aquachannel, P20 or P8 floor membranes and Aqua Pump Pro sumps and pumps).
When used within a fully designed and specified waterproofing design, Platon Plaster Mesh can provide a Grade 3 environment, as laid out in BS8102:2009.

Platon PLASTER MESH is for use above or below ground and unlike wet or liquid applied forms of 'tanking' it can be worked on immediately after installation without waiting for drying or curing to occur.

BENEFITS OF PLATON PLASTER MESH

When compared with other forms of waterproofing:

- No extensive preparation of structure.
- Water is directed behind the membrane to a drain channel for gravity drainage or a sump for pumped discharge.

- Ingressing water is de-pressurized and managed within the system and not diverted to other areas.
- Complete freedom of choice of wall finishes.
- Rapid and straightforward installation.
- Impermeable to water and water vapour.
- Reliable 'Type C' Waterproofing.

THE PRODUCT

Platon PLASTER MESH is manufactured from high-density polyethylene (HDPE) with a stud height of 8mm. Plaster Mesh is supplied in rolls measuring 2m x 20m and is clear/translucent in colour.
It is recommended for internal applications only. Platon Plaster Mesh can be used in conjunction with other Platon membranes, above or below ground.

INSTALLATION

Platon PLASTER MESH can be applied to retained sound renders, brickwork, blockwork, stone or concrete.
The quality and appearance of the applied finishes will be a direct reflection of the underlying substrate.
All surfaces must be of a sound, firm nature and any loose areas should be removed prior to application.
Uneven, loose, or soft brick/stonework may need to be dubbed out to level off and stabilise the background.
Retaining sound cement render can be a good option if the substrate underneath is known to be in poor condition.
Gypsum based plaster, wallpaper and any buried timber must be removed as these materials can deteriorate over time and in the presence of moisture.
Where necessary a fungicide wash should be applied to the wall surface.

Platon PLASTER MESH can also be used on floors and the mesh can be useful when underfloor heating pipes need to be firmly located before a screed is laid. Small 'zip' ties threaded through the mesh provide a firm anchor without penetrating the membrane.
Remove loose and soft plaster/render, wallpapers and embedded timbers.
Dub out voids, hollows and loose areas of masonry using a cement mortar.
Offer up the membrane, mesh side facing into the room, and fix in place using sealed Plaster Plugs (use Platon Rope).
Pull the membrane as tightly as possible against the structure to minimise hollow areas behind as these can interfere with the application of plaster or plasterboard.
Use a minimum of 13 fixings per square metre, spaced out in a regular 'diamond' pattern no more than 250mm apart. Drill through the membrane in the centre of a 4 stud cluster, rather than through the stud itself.
In some cases, additional fixings may be required in order to produce a stable and tight membrane layer.
Fit the membrane tightly into and around corners to avoid damage when applying finishes.

Platon PLASTER MESH is joined by overlapping the edge of one sheet by another underneath by a minimum of 2 studs. Fix Platon Plaster Plugs through the studs as close as possible to the edge of the membrane.
Fixings should be made at 150mm centres along the joint.
Once all fixings are in place, clean the membrane surface thoroughly and ensure it is dry and free from dust.
Apply Platon Overtape along the joint with equal overlaps of the tape onto each sheet of membrane and press firmly into place. If, for some reason the membrane edges are in tension or are likely to try and pull apart, reinforce the joint with Platon Cornerstrip before applying the Overtape.
Refer to the Platon cavity membrane installation guide for further information.

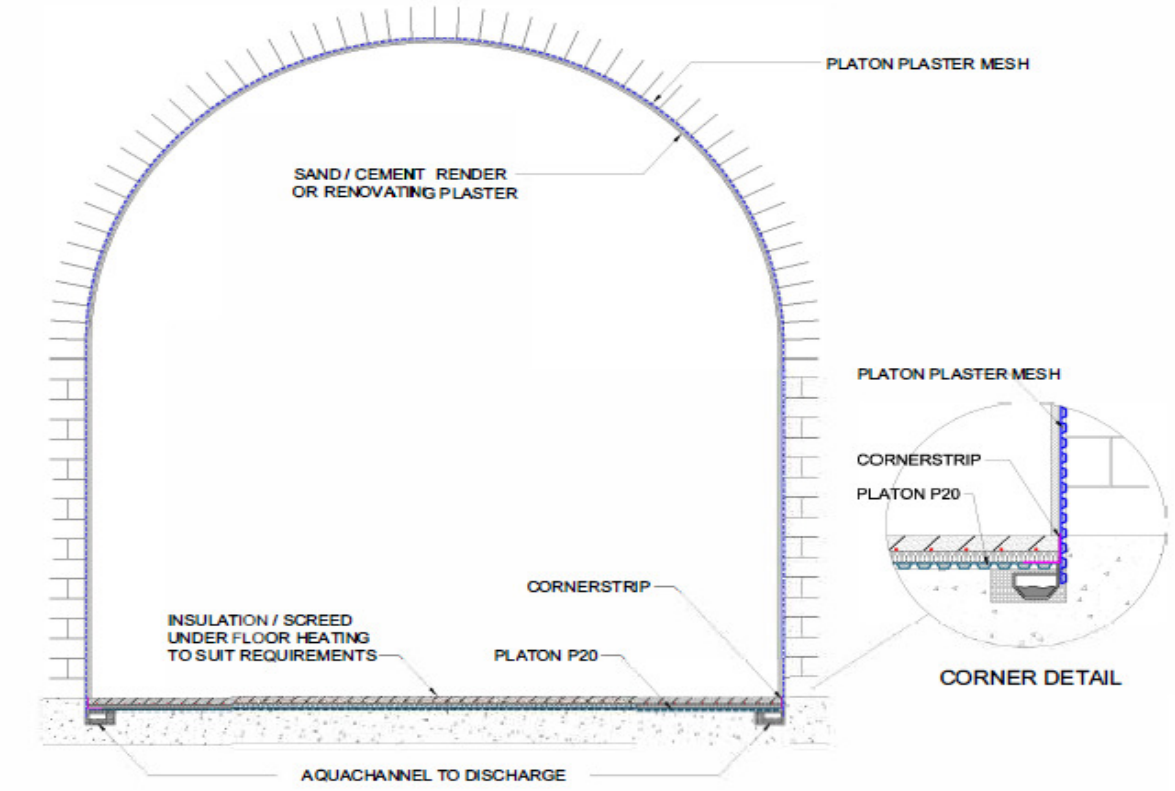

FINISHES

Most common lightweight and renovating plasters (Tarmac Whitewall) or sand/cement renders can be applied to **Platon PLASTER MESH**.
(The use of British Gypsum Hardwall or Tuff Coat is not recommended).
When using sand/cement renders, mixes of 1part cement to 6 parts washed plastering sand, incorporating either **Triton SBR** or hydrated lime should be used.
NB Grade 'M'; medium sharp sand should be used.
Do not use soft or building sand.
All renders/plasters should be applied in a minimum of two coats, allowing the 1st coat of 7mm – 10mm to be trowelled firmly into the mesh facing and then scratched to provide a key for subsequent coats to be applied.
The first scratch coat should be left to cure and harden, ideally this should be 7 – 10 days depending on site & atmospheric conditions
Do not allow the plaster or render to dry out too quickly or cracking may occur.
The minimum plaster thickness should be 15mm and the maximum thickness (sand/cement 30mm) (lightweight plasters 40mm).
Plasterboard can be bonded using regular 'dab' adhesive or low expansion polyurethane foam adhesive.
Apply the adhesive over the heads of the fixing plugs and ensure that 50% of the membrane area is also covered.
This ensures that direct 'through' contact is made between the plasterboard and the masonry substrate.
Plasterboard fixed in this way can be skimmed the next day and painted or wallpapered a few days after that.
Drying times are very much reduced when compared to 'wet' systems.

DRAINAGE

If free water is present or there is a risk of it occurring, provision must be allowed for the water to flow to natural drainage or a sump and pump. (*BS8102:2009).*
Triton have a full range of Sumps and pumps, control panels and water level alarms and monitors.

ROLL SIZE AND ANCILLARIES

Rolls of: 2M x 20M
Plaster Plugs: box of 500 (at the rate of 13/M^2, 540 are used with a 40M^2 roll.
Platon Rope: 5M roll (one roll per 100 Plaster Plugs).
Platon Overtape: 25M roll (one roll per full size roll of Plaster Mesh).
Platon Cornerstrip: 10M roll, used as joint reinforcement.

TECHNICAL DATA

Membrane Material:	High Density Polyethylene.
Sheet thickness:	0.70 mm approximately
Stud height:	8mm
Unit weight:	0.700kg/m^2
Air gap volume:	5.5 litres/m^2
Compressive strength:	150 kN/m^2
Colour:	Clear/translucent
Service temperature range:	-40°C to +80°C
Storage:	Rolls to be stored upright and under cover if possible.

NBS Clause: J40 (Flexible sheet tanking, damp proofing) 290

For further information, contact:
Triton Systems
Units 3 –5 Crayford Commercial Centre
Greyhound Way,
Crayford,
Kent.
DA1 4HF
Tel: 01322 318830 Fax: 01322 524017
www.tritonsystems.co.uk
info@tritonsystems.co.uk

DECLARATION OF PERFORMANCE

Referanse: Platon P8 Mesh

Date: 2013 07 01 version 1
Identification of building product: see product packaging

Damp proof ventilating and drainage sheet / Ventilating and draining vapour control layer

NS-EN 13967:2012 / NS-EN 13984:2013 AVCP 2+	**Isola as** **N-3945** **Porsgrunn, Norway**

Notified body SINTEF, certificate no. 1071-CPR-1196/1197

Essential characteristics	Performance
Reaction to fire	Class F
Tensile strength properties (minimum)	
MD	340 N/50 mm
CMD	225 N/50 mm
Resistance to static loading, øtool= 10mm:	Pass at 20 kg
Resistance to impact, wtool= 500g (method A):	Pass at 0,25 m
Resistance to tearing (minimum)	290 N
Joint strength	55 N
Watertightness: Durability	Pass at 2kPa
After heat ageing	Pass
After chemical ageing	Pass
Water vapour resistance: Durability	380 m ± 25%
After heat ageing	Pass
Durability against alkali	Pass
Dangerous substances	None
Resistance to deformation under load (max.)	30% at 50 kN/m²

The performance of the product identified is in conformity with the declared performance above.
This declaration of performance is issued under the sole responsibility of the manufacturer.
Signed for and on behalf of the manufacturer by:

Name and Function	Place and date of issue	Signature
Richard I. Waterhouse, Quality Manager, Platon Factory.	Notodden 01.07.2013	

Product Data Sheet

PLATON DOUBLE DRAIN

DRAINAGE & PROTECTION MEMBRANE

Platon DOUBLE DRAIN is a vertical drainage layer for external basement walls and a protection board to primary membranes. It consists of an impermeable studded sheet, manufactured from high-density polyethylene with a polypropylene filter fabric bonded to the top of the surface of the studs.

Channels between the studs form an air gap against the underlying structure. **Platon DOUBLE DRAIN** forms drainage layers on both sides of the studded core sheet. The filter fabric facing the backfill material ensures the drainage channels are not blocked or obstructed.

INSTALLATION

Platon DOUBLE DRAIN can be fixed vertically or horizontally to suit the application.

Platon DOUBLE DRAIN must be installed over a primary membrane, such as brushed on bitumen coatings. Fix **Platon DOUBLE DRAIN** along the top edge above the primary membrane, with **Platon DOUBLE DRAIN** cramps at 250mm centres. Overlap vertical joints by 500mm and horizontal joints by 150mm. Filter fabric can be pulled back for successive overlap of the membrane and filter fabric.

Fix **Platon Top Edge Moulding** along the tope edge of the membrane to avoid debris or backfill material from blocking the drainage channels.

Ensure adequate drainage from **PLATON DOUBLE DRAIN** to drainage pipes.

STORAGE, HANDLING & TRANSPORT

Rolls should be protected from dust, dirt etc., and must be stored upright and undercover.

NBS Specification: J40 70, 295, 380 (Flexible sheet tanking, damp proofing)
R16 380 (Ground water pressure relief drainage)

Technical Data

Membrane	PEH
Filter Fabric	PP
Stud height	approx 8.0 mm
Membrane thickness	0.50 mm
Weight	590 g/m²
Drainage capacity	max 2.3 ltr/m²
Resistance to biological attack	Does not rot or support growth
Chemical resistance	Resistant to all chemicals in normal building construction
Membrane colour	Black
Roll Size	2m x 15m x 7mm

For further information please contact:

Triton Chemical Manufacturing Co Ltd T/a Triton Systems
Units 3 – 5 Crayford Commercial Centre, Greyhound Way, Crayford, Kent DA1 4HF

Tel: 01322 318830 **Fax:** 01322 524017 **Email:** info@tritonsystems.co.uk

www.tritonsystems.co.uk

Ref: Platon Double Drain 07/11

DECLARATION OF PERFORMANCE

Referanse: Platon Double Drain

Date: 2013 07 01 version 1
Identification of building product: see product packaging

Geotextile related product for drainage (D) in drainage systems. Intended use: D

EN 13252:2000 AVCP 2+	**Isola as** **N-3945** **Porsgrunn, Norway**

Notified body SINTEF, certificate no. 1071-CPR-1215

Essential characteristics		Nominal performance	Tolerance
Tensile strength properties (minimum)	MD	9.0 kN/m	-15%
	CMD	7.0 kN/m	-15%
Compression creep (EN ISO 25619-1)		1.2 mm	+10%
Water flow capacity (EN ISO 12958, rigid-soft)		1.3 l/sm	-10%
Resistance to oxidation (ENV ISO 13438)		100% residual	

Durability: Cover within 4 months of installation

Predicted to be durable for a minimum of 25 years in natural soil with 4<pH<9 and soil temperature < 25°C

The performance of the product identified is in conformity with the declared performance above.
This declaration of performance is issued under the sole responsibility of the manufacturer.
Signed for and on behalf of the manufacturer by:

Name and Function	Place and date of issue	Signature
Richard I. Waterhouse, Quality Manager, Platon Factory.	Notodden 01.07.2013	

Fire characteristics

Platon membranes have a fire classification of class F in accordance with EN 13967 and EN 13984, or B2 in accordance with DIN 4102 (normal flammable).

Platon membranes have an oxygen index of 18% (air normally has an oxygen content of 21%) i.e. Platon membranes will burn in air which contains 3% less oxygen than normal. In other words, they will burn relatively easily.

Platon membranes produce water and carbon dioxide when they burn. They do not give off toxic fumes. Incomplete combustion will give off some carbon monoxide, the same as for most materials.

The contribution to a fire is low, because the energy contribution or calorific value is small, compared with many other building materials.

In normal applications, Platon membranes are covered by other materials, so that the fire characteristics of these materials decide the fire risk in, and fire classification of, the construction.

Platon Cavity Drain Membranes – Ancillaries

PLATON BRICK PLUGS

For the installation of Platon P8 and Platon P5 membranes

Drill size 10mm

Average usage rate – 5 per m^2 (200 per $40m^2$ roll)

100 per box

PLATON PLUG SEALS

For use with Platon Brick Plugs

100 per box

PLATON PLASTER PLUGS

For the installation of Platon Plaster Base and Platon Plaster Mesh membranes.

Drill size 8mm

Average usage rate – 13 per m^2 (520 per $40m^2$ roll)

500 per box

PLATON PLASTER PLUG SEAL

For use with Platon Plaster Plugs

100 per box

PLATON SEALING TAPE

Used to form a seal between separate membrane drops.

2mm x 30mm x 20m

Usage – 1 roll per 40m² roll membrane

5 per box

PLATON SEALING ROPE

Used to form a seal around the neck of the Platon Brick Plug and the membrane when the plug is driven home into the substrate.

10mm x 5m

Usage – 1 roll per 100 brick plugs
– 5 rolls per roll P20 Membrane

10 per box

PLATON OVERTAPE

To seal the joints between drops of Platon Plaster Base and Platon Plaster Mesh membranes.

Usage – 1 roll Overtape per 40m² roll of membrane

115mm x 1mm x 25m

CORNERSTRIP

Used to link Platon wall and floor membranes. The strip is folded in half and positioned with the crease into the wall/floor angle. Once correctly aligned, the backing paper can be pulled away and the self-adhesive strip pressed firmly against the floor and wall membranes.

Usage – 1 roll per 10m length of wall:floor or wall:soffit joints

150mm x 1.5mm x 10m

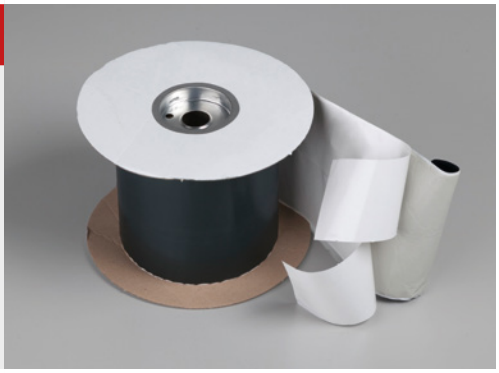

ICF FIXING PLUGS

50mm corkscrew plugs designed to be sealed around head with Sealing Rope and screwed into insulation or ICF for fixing Platon Membranes.

Average usage – 5 per m² (200 per 40m² membrane)

100 per pack

ISOLA MEMBRANE TIES

A lateral restraint system that is screwed into the self-tapping hole of the Platon Brick Plug and anchored into the mortar bed joint when an independent brick/block wall is built in front of the Platon wall membrane.

100 per pack

PLATON TOP EDGE MOULDING

For installation along the top edge of Platon Double Drain membrane to avoide debris or backfill material from blocking the drainage channels.

Supplied in 2m lengths

PLATON X CRAMPS

For the installation of Platon Double Drain, fix along the top edge of the membrane only, at 250mm centres.

60 per pack

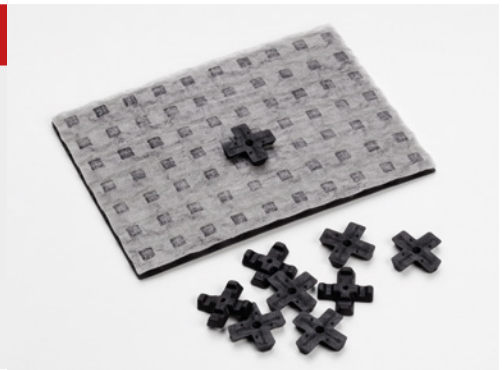

Triton Contact Details:

Triton Systems Ltd.
Units 3 – 5 Crayford Commercial Centre, Greyhound Way, Crayford, Kent DA1 4HF

Tel: 01322 318 830
Fax: 01322 524 017
Email: info@tritonsystems.co.uk

www.tritonsystems.co.uk

1067 05/16

Product Data Sheet

Triton ANTI LIME COATING

Description

Triton ANTI LIME COATING is a blend of high-grade silicates and wetting agents, held in suspension with water as a carrier. Once applied to the concrete surface, this unique product seals the concrete surface.

Key Benefits

- Reduces “Free Lime” leaching from concrete surfaces.
- Totally seals the concrete surface
- Increases abrasion resistance
- Resistant to acid concentrates
- Totally safe – water based
- Normally one coat application
- Equipment can be easily cleaned with water.
- An effective Anti-lime coating to new concrete in Cavity Drain systems.

Technical Data

Appearance:	Opaque clear liquid
Coverage:	2 – 4m² / kg
Solids:	8% to 10%
Solubility in Water:	Complete
Flash Point:	Not Applicable
Shelf Life:	At least 1 year
Drying Time:	1 hour tack free 4 hour hard dry
Application Temperature:	5°C - 35°C

All technical data stated herein is based on test carried out under laboratory conditions.

Application Guidelines

Ensure that the surface to be treated is free from oil, dust and other foreign matter. Apply **Triton ANTI LIME COATING** at a rate of 2 – 4 square metres per kg using a brush or spray unit. Apply additional treatments if required. Allow 2-3 hours for the product to dry. After this period, check for any “pudding” of the product on the concrete surface. If “pudding” has occurred, apply water to the affected and sweep the **Triton ANTI LIME COATING** with a broom to allow further penetration in to the treated substrate.

NOTE: Porous concrete may require subsequent applications; a trial should be conducted to assess the number of applications applied.

After **Triton ANTI LIME COATING** has dried it may appear patchy but the appearance should improve after 2-3 months as the **Triton ANTI LIME COATING** continues to react and release any trapped water.

Warning

Do not allow **Triton ANTI LIME COATING** to come in to contact with painted surfaces, glass or aluminum, as pitting may occur. If contact occurs, flush with copious amounts of water. Usage is not recommended where an aesthetic finish is important such as with coloured concrete.

Limitations

Do not apply **Triton ANTI LIME COATING** in the following cases;

- To seal lightweight or other extremely porous masonry that contains actual holes and air pockets.
- When the temperature falls to below 5°C
- To areas previously treated with curing or sealing agents, unless these coatings have been removed by chemical or mechanical means.

Packaging

Triton ANTI LIME COATING is supplied in a 25kg drum. Packing size may vary subject to local regulations and requirements.

Storage

Triton ANTI LIME COATING should be stored at room temperature (min 10°C and max 35°C), kept dry and out of direct sunlight. If these conditions are maintained and the product packaging is unopened, then a shelf life of 1 year can be expected.

Health & Safety

Triton ANTI LIME COATING should only be used as directed. We always recommend that the Health & Safety data sheet is carefully read prior to application of the material. Our recommendations for protective equipment should be strictly adhered to for your personal protection. The Health & Safety data sheet is available upon request from Triton.

For further information please contact:

Triton Systems Ltd

Units 3 – 5 Crayford Commercial Centre, Greyhound Way, Crayford, Kent DA1 4HF

Tel: 01322 318830 **Fax:** 01322 524017 **Email:** info@tritonsystems.co.uk

www.tritonsystems.co.uk

Ref: Triton ANTI LIME COATING 11/13

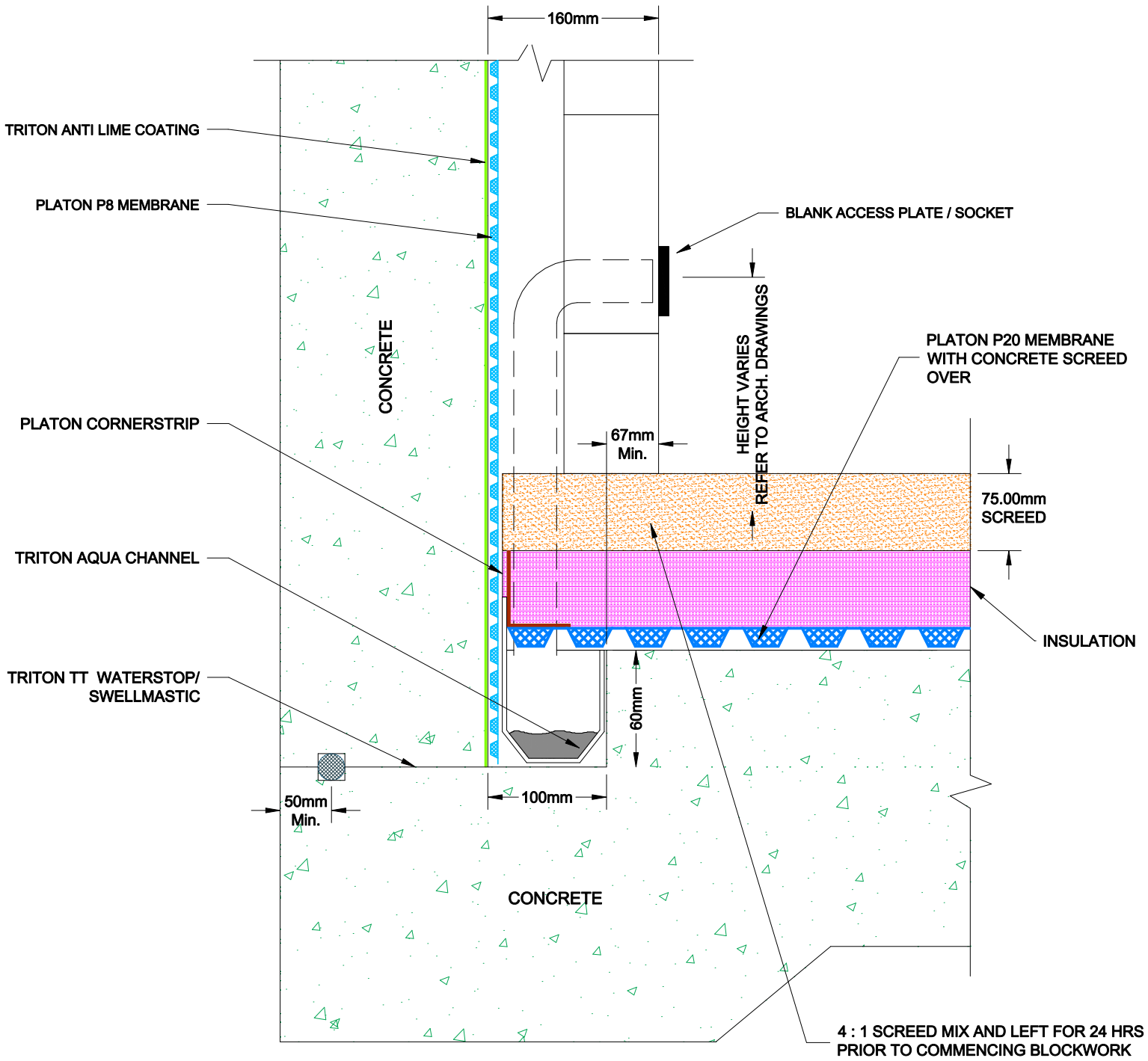

www.tritonsystems.co.uk

Triton Systems

Units 3 - 5 Crayford Commercial Centre
Greyhound Way, Crayford, Kent. DA1 4HF

Telephone: *01322 318830*
Fax: *01322 524017*
Email: *info@tritonsystems.co.uk*
Web: *www.tritonsystems.co.uk*

NOTE

ALL INSTALLATION TO BE CARRIED OUT IN STRICT ACCORDANCE WITH MANUFACTURERS INSTALLATION INSTRUCTIONS. FOR FURTHER ASSISTANCE CONTACT TRITON TECHNICAL ON THE TELEPHONE NUMBER ABOVE.

REV.	MOD. BY	DATE	CHK. BY	APP. BY

Alterations

TITLE:

Typical Basement Perimeter
Wall / Slab Junction

DRG. No. TWS-022-1(C) REV 1

		System Files:
DRAWN	JDF, CBS, TGL	TWS-022-1(C).pdf
DATE	23rd December 2015	TWS-022-1(C).dwg
SCALE (A3)	Not To Scale	
CHECKED		
APPROVED		

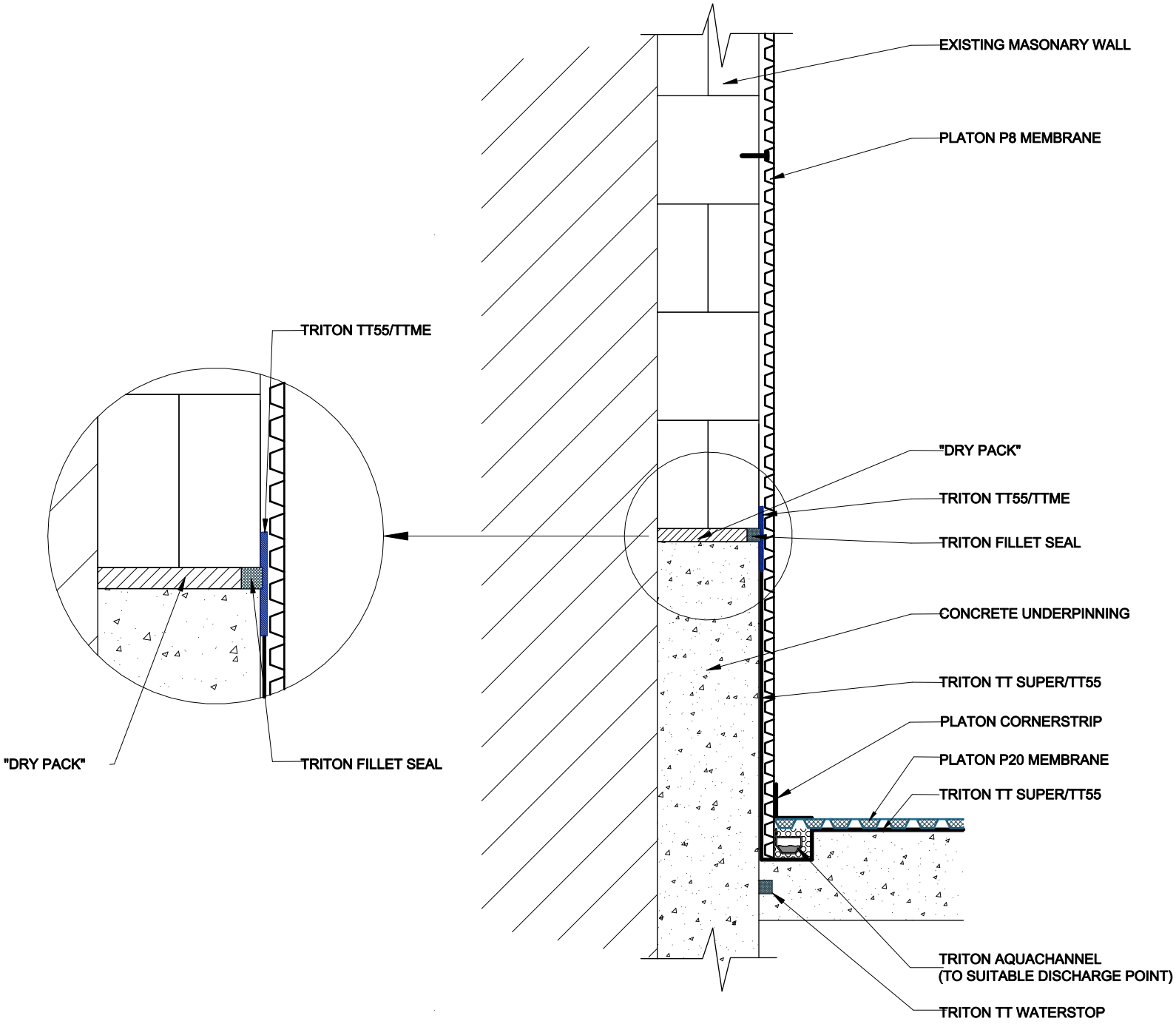

www.tritonsystems.co.uk

Triton Systems

Units 3 - 5 Crayford Commercial Centre
Greyhound Way, Crayford, Kent. DA1 4HF

Telephone: **01322 318830**
Fax: **01322 524017**
Email: info@tritonsystems.co.uk
Web: www.tritonsystems.co.uk

NOTE

ALL INSTALLATION TO BE CARRIED OUT IN STRICT ACCORDANCE WITH MANUFACTURERS INSTALLATION INSTRUCTIONS. FOR FURTHER ASSISTANCE CONTACT TRITON TECHNICAL ON THE TELEPHONE NUMBER ABOVE.

REV.	MOD. BY	DATE	CHK. BY	APP. BY

Alterations

TITLE:

Platon Membrane
To Underpinning Detail

DRG. No. TWS-027-1(C) — REV 2

		System Files:
DRAWN	JDF, CBS	TWS-027-1(C).pdf
DATE	4th July 2008	TWS-027-1(C).dwg
SCALE (A3)	Not To Scale	
CHECKED		
APPROVED		

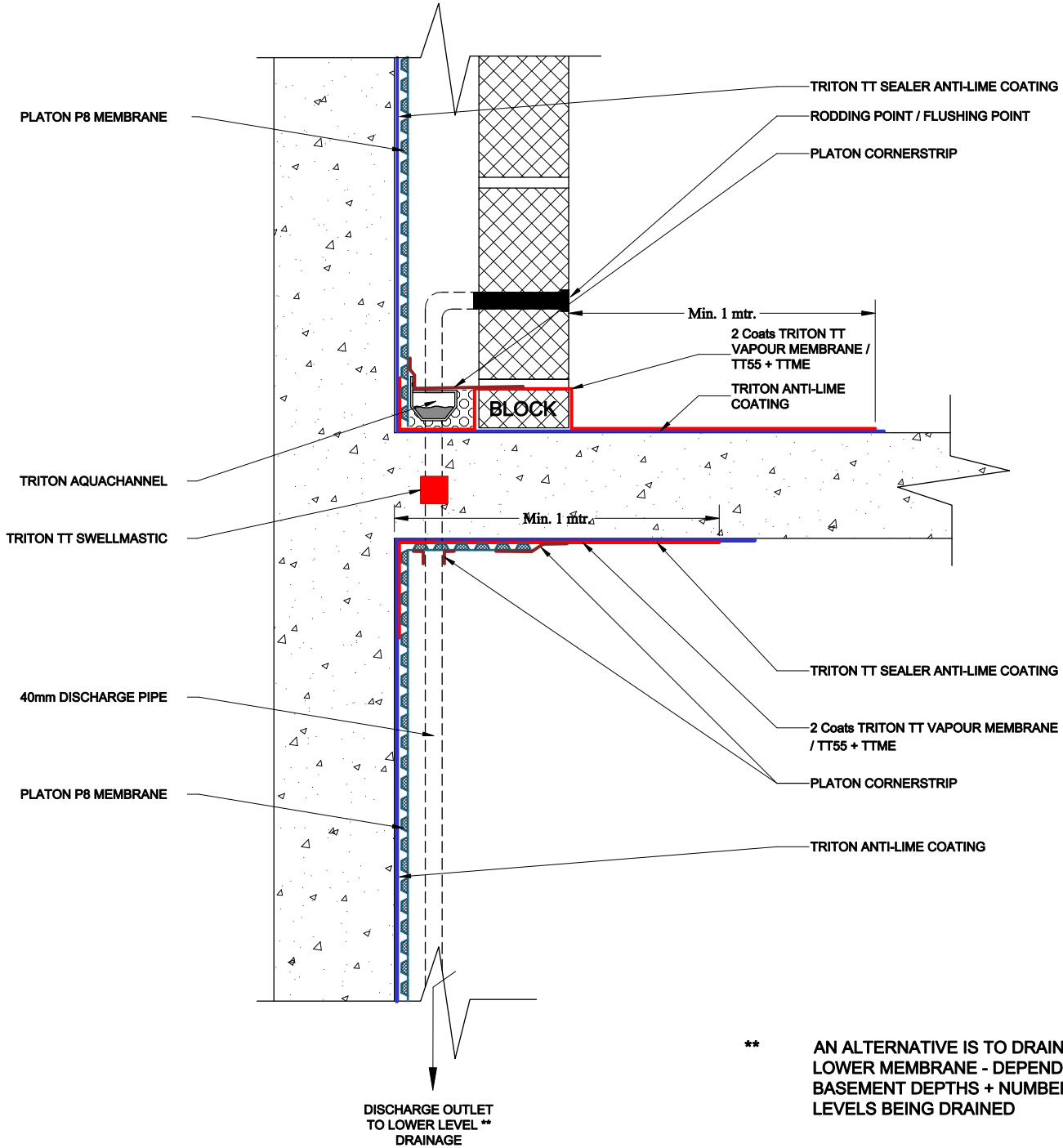

** AN ALTERNATIVE IS TO DRAIN BEHIND LOWER MEMBRANE - DEPENDING ON BASEMENT DEPTHS + NUMBER OF LEVELS BEING DRAINED

www.tritonsystems.co.uk

Triton Systems

Units 3 - 5 Crayford Commercial Centre
Greyhound Way, Crayford, Kent. DA1 4HF

Telephone: 01322 318830
Fax: 01322 524017
Email: info@tritonsystems.co.uk
Web: www.tritonsystems.co.uk

NOTE

ALL INSTALLATION TO BE CARRIED OUT IN STRICT ACCORDANCE WITH MANUFACTURERS INSTALLATION INSTRUCTIONS. FOR FURTHER ASSISTANCE CONTACT TRITON TECHNICAL ON THE TELEPHONE NUMBER ABOVE.

REV.	MOD. BY	DATE	CHK. BY	APP. BY

Alterations

TITLE: Type C Waterproofing To Multi-Level Basemant

Mid-Floor/Soffitt Detailing

DRG. No. TWS-032.1(C) REV 1

		System Files:
DRAWN	JDF, CBS	TWS-032-1(C).pdf TWS-032-1(C).dwg
DATE	20th August 2012	
SCALE (A3)	Not To Scale	
CHECKED		
APPROVED		

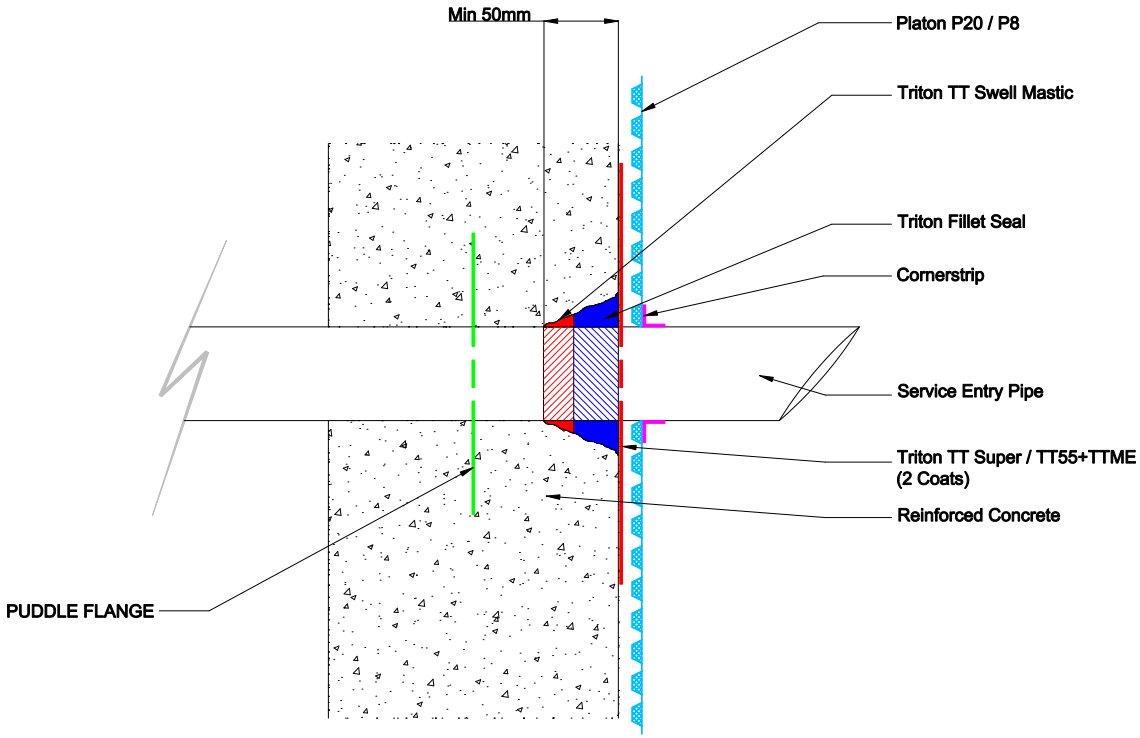

RETROFIT PIPE / SERVICE PENETRATION

www.tritonsystems.co.uk

Triton Systems

Units 3 - 5 Crayford Commercial Centre
Greyhound Way, Crayford, Kent. DA1 4HF

Telephone: **01322 318830**
Fax: **01322 524017**
Email: info@tritonsystems.co.uk
Web: www.tritonsystems.co.uk

NOTE

ALL INSTALLATION TO BE CARRIED OUT IN STRICT ACCORDANCE WITH MANUFACTURERS INSTALLATION INSTRUCTIONS. FOR FURTHER ASSISTANCE CONTACT **TRITON TECHNICAL** ON THE TELEPHONE NUMBER ABOVE.

REV.	MOD. BY	DATE	CHK. BY	APP. BY

Alterations

TITLE:

Service Entry Sealing To Concrete Structures

DRG. No.	TWS-047-1(C)	REV 3A

		System Files:
DRAWN	TGL	TWS-047-1(C).pdf TWS-047-1(C).dwg
DATE	JULY 2013	
SCALE (A3)	Not To Scale	
CHECKED		
APPROVED		

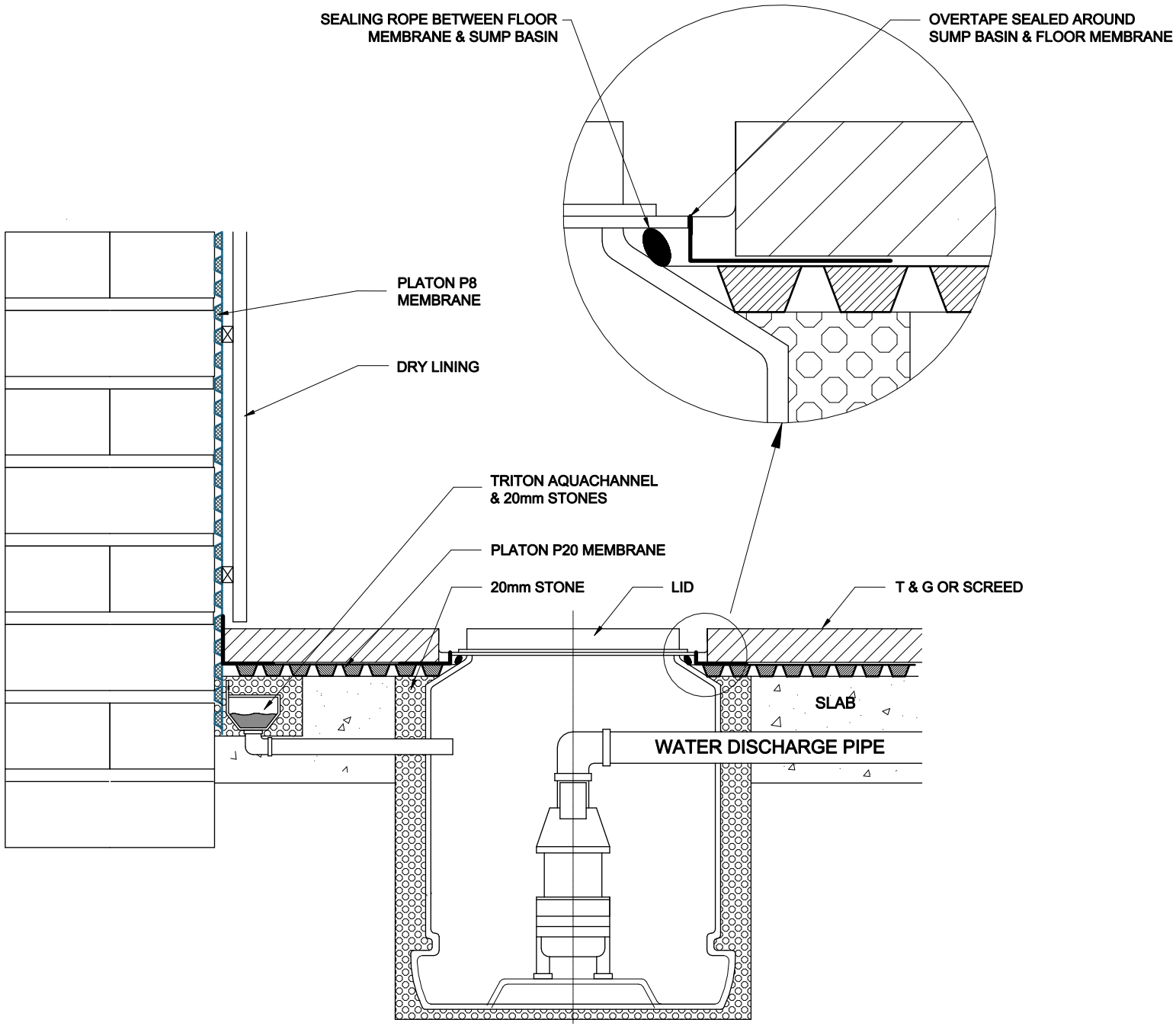

www.tritonsystems.co.uk

Triton Systems

Units 3 - 5 Crayford Commercial Centre
Greyhound Way, Crayford, Kent. DA1 4HF

Telephone: **01322 318830**
Fax: **01322 524017**
Email: info@tritonsystems.co.uk
Web: www.tritonsystems.co.uk

NOTE

ALL INSTALLATION TO BE CARRIED OUT IN STRICT ACCORDANCE WITH MANUFACTURERS INSTALLATION INSTRUCTIONS. FOR FURTHER ASSISTANCE CONTACT TRITON TECHNICAL ON THE TELEPHONE NUMBER ABOVE.

REV.	MOD. BY	DATE	CHK. BY	APP. BY

Alterations

TITLE:
Typical Sump Pump Detail
Using Triton Aquapump Pro - Sump
Including Channel & Membranes

DRG. No. TWS-056-1(C) — REV 1

		System Files:
DRAWN	JDF, CBS	TWS-056-1(C).pdf
DATE	23rd August 2012	TWS-056-1(C).dwg
SCALE (A3)	Not To Scale	
CHECKED		
APPROVED		

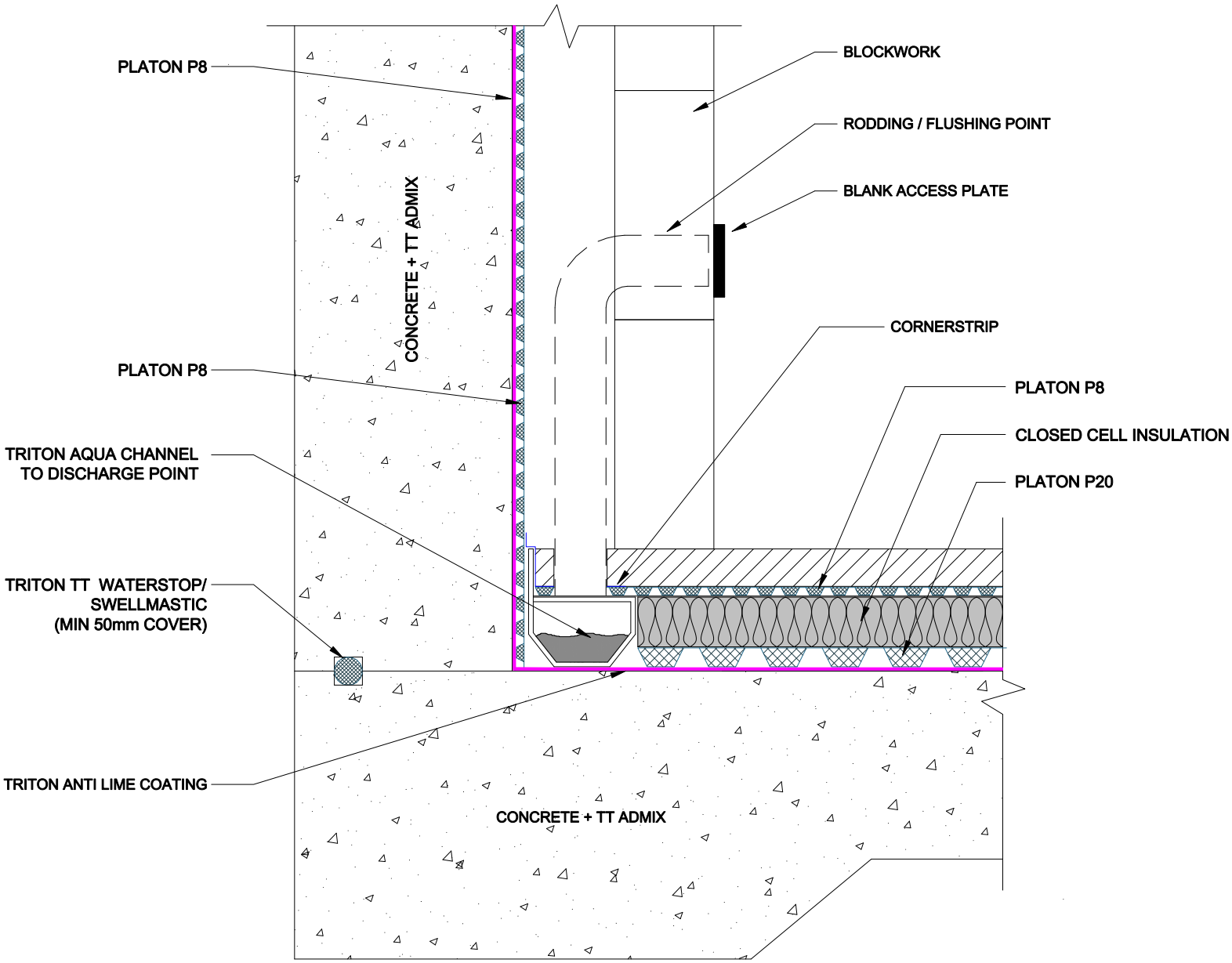

www.tritonsystems.co.uk

Triton Systems

Units 3 - 5 Crayford Commercial Centre
Greyhound Way, Crayford, Kent. DA1 4HF

Telephone: **01322 318830**
Fax: **01322 524017**
Email: info@tritonsystems.co.uk
Web: www.tritonsystems.co.uk

NOTE

ALL INSTALLATION TO BE CARRIED OUT IN STRICT ACCORDANCE WITH MANUFACTURERS INSTALLATION INSTRUCTIONS. FOR FURTHER ASSISTANCE CONTACT TRITON TECHNICAL ON THE TELEPHONE NUMBER ABOVE.

REV.	MOD. BY	DATE	CHK. BY	APP. BY

Alterations

TITLE:

Typical Basement Perimeter
Wall / Floor Junction

DRG. No. TWS-065-1(D) REV .

		System Files:
DRAWN	TGL	TWS-065-1(D).pdf
DATE	25th October 2014	TWS-065-1(D).dwg
SCALE (A3)	Not To Scale	
CHECKED		
APPROVED		

J40 FLEXIBLE SHEET TANKING / DAMP PROOFING

To be read with Preliminaries / General conditions.

TYPES OF TANKING / DAMP PROOFING

290 HIGH DENSITY POLYETHYLENE / POLYPROPYLENE STUDDED DAMP PROOFING

- Substrate:
  Preparation: In accordance with manufacturer's recommendations.
- Manufacturer: Triton Systems, 3-5 Crayford Commercial Centre, Crayford. DA1 4HF
  Tel: 01322 318830. Fax: 01322 524017.
  E-mail: technical@tritonsystems.co.uk
- Product reference: Platon P8 Cavity Drain Membrane.
- Stud height: 7mm.
- Colour: Translucent
- Fixing: Vertical surfaces only, fixed through studs.
- Fasteners: Platon Brick Plugs.
- Fixing centres:1000mm maximum, staggered.
- Sealing: Platon Sealing Rope around Platon Brick Plugs before insertion.

OR Platon Brick Plug Seals.

- Joints: Minimum overlap; 70mm Flange on side of roll *or* 200mm end / cut rolls.
- Sealing: Platon Sealing Tape in lap.
- Drainage components: See Clauses 382 & 388. Control panels and alarms available.
- Accessories: See product data sheet.

WORKMANSHIP

310 WORKMANSHIP GENERALLY

- Condition of substrate:
- Clean and even textured, free from voids and sharp protrusions.
- Moisture content: compatible with damp proofing / tanking.
- Air and surface temperature: Do not apply sheets if below minimum recommended by membrane manufacturer.
- Condition of membrane at completion:
- Neat, smooth and fully supported, dressed well into abutments and around intrusions.
- Completely impervious and continuous.
- Undamaged. Prevent puncturing during following work.
- Permanent overlying construction: Cover membrane as soon as possible.

320 INSPECTION

- Give notice: Before covering any part of membrane with overlying construction.

360 JUNCTIONS WITH PROJECTING DPC's / CAVITY TRAYS

- Adjoining surfaces: Clean and dry.
- Dpc's / Cavity trays: Lap and fully bond / seal with sheeting.
- Laps (minimum): 150mm.
- Bonding / Sealing: Platon Overseal tape.

370 A PIPES, DUCTS, CABLES, ETC:

- Where these pass through sheeting, make junctions completely impervious, following details as recommended for the purpose by the sheet manufacturer.

382 CAVITY DRAINAGE CHANNELS

- Manufacturer: Triton Systems, 3-5 Crayford Commercial Centre, Crayford, Kent DA1 4HF.
- Tel: 01322 318830. Fax: 01322 524017.
- E-mail: info@tritonsystems.co.uk Web: www.tritonsystems.co.uk
- Product reference: Triton Aqua Channel.

388 CAVITY DRAINAGE SUMPS WITH INTEGRAL PUMPS

- Manufacturer: Triton Systems, 3-5 Crayford Commercial Centre, Crayford, Kent.
- DA1 4HF.
- Tel: 01322 318830. Fax: 01322 524017.
- E-mail: info@tritonsystems.co.uk Web: www.tritonsystems.co.uk
- Product reference: Triton Aqua Pump Pro + Battery back-up system
- Type: Manufacturer's standard.
- Flow rate: Manufacturer's standard.
- Pumping head (minimum): Manufacturer's standard.
- Discharge pipe size: Manufacturer's standard.

Or

- Product reference: Triton Aqua Pump Pro plus
- Type: Manufacturer's standard.
- Flow rate: Manufacturer's standard.
- Pumping head (minimum): Manufacturer's standard.
- Discharge pipe size: Manufacturer's standard.

Or

- Product reference: Triton Aqua Pump Pro
- Type: Manufacturer's standard.
- Flow rate: Manufacturer's standard.
- Pumping head (minimum): Manufacturer's standard.
- Discharge pipe size: Manufacturer's standard.

TRITON SYSTEMS:

Tel: 01322 318830

J40 FLEXIBLE SHEET WATERPROOFING / DAMP PROOFING

To be read in conjunction with prelimaries / General conditions.

TYPES OF TANKING / DAMP PROOFING

290 HIGH DENSITY POLYETHYLENE/POLYPROPYLENE STUDDED CAVITY DRAIN MEMBRANE

- Substrate:……..
- Preparation: In accordance with manufacturers recommendations.
- Manufacturer: Triton Systems, 3-5 Crayford Commercial Centre, Greyhound Way, Crayford. DA1 4HF.
- Tel: 01322 318830. Fax: 01322 524017.
- Email: info@tritonsystems.co.uk. Web: www.tritonsystems.co.uk.
-
- Product reference: Platon P20 Membrane.
- Stud height: 20mm.
- Colour: Black.
- Fixing: Vertical surfaces only, fixed through studs.
- Fasteners: Platon Brick Plugs.
- Fixing centres: 500mm maximum, staggered.
- Sealing: Platon Sealing Bead around Platon Brick Plugs before insertion.
- Joints: Minimum overlap 2 studs.
- Sealing: Platon Sealing Bead placed between studs.
- Drainage Components: See Clauses 382 and 388. Control Panels and Alarms available.
- Accessories: See product data sheet.

WORKMANSHIP

310 WORKMANSHIP GENERALLY

- Condition of substrate:
- Clean and even textured, free from voids and sharp protrusions.
- Moisture content: Compatible with damp proofing/tanking.
- Air and surface temperature: Do not apply sheets if below minimum recommended by membrane manufacturer.
- Condition of membrane at completion:
- Neat, smooth and fully supported. Dressed well into abutments and around intrusions.
- Completely impervious and continuous.
- Undamaged. Prevent puncturing during following work.
- Permanent overlying construction: Cover membrane as soon as possible.

320 INSPECTION

- Give notice: Before covering any part of membrane with overlying construction.

360 JUNCTIONS WITH PROJECTING DPC'S / CAVITY TRAYS

- Adjoining surfaces: Clean and dry.
- Dpc's / Cavity trays: Lap and fully bond / seal with sheeting.
- Laps (minimum): 150mm.
- Bonding / Sealing: Platon Overseal Tape.

370A PIPES, DUCTS, CABLES, ETC

- Where these pass through sheeting, make junctions completely impervious, following details as recommended for the purpose by the sheet manufacturer.

382 CAVITY DRAINAGE CHANNELS

- Manufacturer: Triton Systems, 3-5 Crayford Commercial Centre, Crayford, Kent. DA1 4HF.
- Tel: 01322 318830. Fax: 01322 524017.
- E-mail: info@tritonsystems.co.uk Web: www.tritonsystems.co.uk
- Product reference: Triton Aqua Channel.

388 CAVITY DRAINAGE SUMPS WITH INTEGRAL PUMPS

- Manufacturer: Triton Systems, 3-5 Crayford Commercial Centre, Crayford, Kent. DA1 4HF.
- Tel: 01322 318830. Fax: 01322 524017.
- E-mail: info@tritonsystems.co.uk Web: www.tritonsystems.co.uk
- Product reference: Triton Aqua Pump Pro + Battery Back Up System.
- Type: Manufacturer's standard.
- Flow rate: Manufacturer's standard.
- Pumping head (minimum): Manufacturer's standard.
- Discharge pipe size: Manufacturer's standard.

Or - Product reference: Triton Aqua Pump Pro Plus

- Type: Manufacturer's standard.
- Flow rate: Manufacturer's standard.
- Pumping head: Manufacturer's standard.
- Discharge pipe size: Manufacturer's standard.

Or - Product reference: Triton Aqua Pump Pro

- Type: Manufacturer's standard.
- Flow rate: Manufacturer's standard.
- Pumping head (minimum): Manufacturer's standard.
- Discharge pipe size: Manufacturer's standard.

J40 FLEXIBLE SHEET TANKING / DAMP PROOFING

To be read with Preliminaries / General conditions.

TYPES OF TANKING / DAMP PROOFING

290 HIGH DENSITY POLYETHYLENE / POLYPROPYLENE STUDDED DAMP PROOFING

- Substrate:
  Preparation: In accordance with manufacturer's recommendations.
- Manufacturer: Triton Systems, 3-5 Crayford Commercial Centre, Crayford. DA1 4HF
  Tel: 01322 318830. Fax: 01322 524017.
  E-mail: technical@tritonsystems.co.uk
- Product reference: Platon P5 Cavity Drain Membrane.
- Stud height: 4mm.
- Colour: Translucent
- Fixing: Vertical surfaces only, fixed through studs.
- Fasteners: Platon Brick Plugs.
- Fixing centres:1000mm maximum, staggered.
- Sealing: Platon Sealing Rope around Platon Brick Plugs before insertion.

OR Platon Brick Plug Seals.

- Joints: Minimum overlap; 70mm Flange on side of roll *or* 200mm end / cut rolls.
- Sealing: Platon Sealing Tape in lap.
- Drainage components: See Clauses 382 & 388. Control panels and alarms available.
- Accessories: See product data sheet.

WORKMANSHIP

310 WORKMANSHIP GENERALLY

- Condition of substrate:
- Clean and even textured, free from voids and sharp protrusions.
- Moisture content: compatible with damp proofing / tanking.
- Air and surface temperature: Do not apply sheets if below minimum recommended by membrane manufacturer.
- Condition of membrane at completion:
- Neat, smooth and fully supported, dressed well into abutments and around intrusions.
- Completely impervious and continuous.
- Undamaged. Prevent puncturing during following work.
- Permanent overlying construction: Cover membrane as soon as possible.

320 INSPECTION

- Give notice: Before covering any part of membrane with overlying construction.

360 JUNCTIONS WITH PROJECTING DPC's / CAVITY TRAYS

- Adjoining surfaces: Clean and dry.
- Dpc's / Cavity trays: Lap and fully bond / seal with sheeting.
- Laps (minimum): 150mm.
- Bonding / Sealing: Platon Overseal tape.

370 A PIPES, DUCTS, CABLES, ETC:

- Where these pass through sheeting, make junctions completely impervious, following details as recommended for the purpose by the sheet manufacturer.

382 CAVITY DRAINAGE CHANNELS

- Manufacturer: Triton Systems, 3-5 Crayford Commercial Centre, Crayford, Kent DA1 4HF.
- Tel: 01322 318830. Fax: 01322 524017.
- E-mail: info@tritonsystems.co.uk Web: www.tritonsystems.co.uk
- Product reference: Triton Aqua Channel.

388 CAVITY DRAINAGE SUMPS WITH INTEGRAL PUMPS

- Manufacturer: Triton Systems, 3-5 Crayford Commercial Centre, Crayford, Kent.
- DA1 4HF.
- Tel: 01322 318830. Fax: 01322 524017.
- E-mail: info@tritonsystems.co.uk Web: www.tritonsystems.co.uk
- Product reference: Triton Aqua Pump Pro + Battery back-up system
- Type: Manufacturer's standard.
- Flow rate: Manufacturer's standard.
- Pumping head (minimum): Manufacturer's standard.
- Discharge pipe size: Manufacturer's standard.

Or

- Product reference: Triton Aqua Pump Pro plus
- Type: Manufacturer's standard.
- Flow rate: Manufacturer's standard.
- Pumping head (minimum): Manufacturer's standard.
- Discharge pipe size: Manufacturer's standard.

Or

- Product reference: Triton Aqua Pump Pro
- Type: Manufacturer's standard.
- Flow rate: Manufacturer's standard.
- Pumping head (minimum): Manufacturer's standard.
- Discharge pipe size: Manufacturer's standard.

J40 FLEXIBLE SHEET TANKING / DAMP PROOFING

To be read with Preliminaries / General conditions.

TYPES OF TANKING / DAMP PROOFING

290 HIGH DENSITY POLYETHYLENE / POLYPROPYLENE STUDDED DAMP PROOFING

- Substrate:
  Preparation: In accordance with manufacturer's recommendations.
- Manufacturer: Triton Systems, 3-5 Crayford Commercial Centre, Crayford. DA1 4HF
  Tel: 01322 318830. Fax: 01322 524017.
  E-mail: technical@tritonsystems.co.uk
- Product reference: Platon PB2 Mesh Cavity Drain Membrane.
- Stud height: 2mm.
- Mesh bonded for plaster finish.
- Colour: Translucent
- Fixing: Vertical surfaces only, fixed through studs.
- Fasteners: Platon Plaster Plugs.
- Fixing centres:150mm maximum, diamond pattern.
- Sealing: Platon Sealing Rope around Platon Plaster Plugs before insertion.

OR Platon Brick Plaster Plug Seals.

- Joints: Butt joints
- Sealing: Platon Mesh Overseal Tape

WORKMANSHIP

310 WORKMANSHIP GENERALLY

- Condition of substrate:
- Clean and even textured, free from voids and sharp protrusions.
- Moisture content: compatible with damp proofing / tanking.
- Air and surface temperature: Do not apply sheets if below minimum recommended by membrane manufacturer.
- Condition of membrane at completion:
- Neat, smooth and fully supported, dressed well into abutments and around intrusions.
- Completely impervious and continuous.
- Undamaged. Prevent puncturing during following work.
- Permanent overlying construction: Cover membrane as soon as possible.

320 INSPECTION

- Give notice: Before covering any part of membrane with overlying construction.

360 JUNCTIONS WITH PROJECTING DPC's / CAVITY TRAYS

- Adjoining surfaces: Clean and dry.
- Dpc's / Cavity trays: Lap and fully bond / seal with sheeting.
- Laps (minimum): 150mm.
- Bonding / Sealing: Platon Overseal tape.

370 A PIPES, DUCTS, CABLES, ETC :

- Where these pass through sheeting, make junctions completely impervious, following details as recommended for the purpose by the sheet manufacturer.

382 CAVITY DRAINAGE CHANNELS

- Manufacturer: Triton Systems, 3-5 Crayford Commercial Centre, Crayford, Kent DA1 4HF.
- Tel: 01322 318830. Fax: 01322 524017.
- E-mail: info@tritonsystems.co.uk Web: www.tritonsystems.co.uk
- Product reference: Triton Aqua Channel.

J40 FLEXIBLE SHEET TANKING / DAMP PROOFING

To be read with Preliminaries / General conditions.

TYPES OF TANKING / DAMP PROOFING

295A GEOCOMPOSITE STUDDED CAVITY DRAINAGE/VENTING MEMBRANE FOR EXTERNAL USE

- Substrate:
  Preparation: In accordance with manufacturer's recommendations.
- Manufacturer: Triton Systems, 3-5 Crayford Commercial Centre, Crayford. DA1 4HF Tel: 01322 318830. Fax: 01322 524017.
  E-mail: technical@tritonsystems.co.uk
- Product reference: Platon Double Drain Membrane.
- Stud height: 6mm.
- Polypropylene filter fabric bonded to top of studs.
- Compressive strength: 200 kn/m².
- Drainage capacity (maximum): 2.3 L/m².
- Air gap volume: 4.0 L/m².
- Roll size: 2m x 15m x 7mm
- Colour: Black.
- Fixing: Vertical surfaces or horizontal surfaces.
- Fasteners: Platon Double Drain Cramps.
- Fixing centres:250mm maximum.
- Joints: Minimum overlap: 500mm vertical, 150mm horizontal.
- Drainage components: Ref in R16 380 (Ground water pressure relief drainage).
- Accessories: Platon Top Edge Moulding.

WORKMANSHIP

310 WORKMANSHIP GENERALLY

- Condition of substrate:
- Clean and even textured, free from voids and sharp protrusions.
- Moisture content: compatible with damp proofing / tanking.
- Air and surface temperature: Do not apply sheets if below minimum recommended by membrane manufacturer.
- Condition of membrane at completion:
- Neat, smooth and fully supported, dressed well into abutments and around intrusions.
- Completely impervious and continuous.
- Undamaged. Prevent puncturing during following work.

370A PIPES, DUCTS, CABLES, ETC.

- Where these pass through sheeting, make junctions completely impervious following details as recommended for the purpose by the sheet manufacturer.

380 Protection boards for damp proofing/tanking

- Manufacturer: Contractors choice.
- Backfilling: Carry out when tanking, loading and protection are complete

Case Study

Triton supplied:
410m² Platon P8, 247m² Platon P20, 797m² Triton Anti Lime Solution to all fresh concrete surfaces, 104 LM of Aqua Channel and components

WATERPROOFING A NOTTING HILL BASEMENT

Triton approved contractors, Advance Property Preservation, installed a Type C (BS 8102 2009) structural waterproofing system in the construction of a luxury domestic basement. The property is a late Victorian, six-bedroomed detached home in Notting Hill, London.

The main contractors excavated beneath the whole of the existing building, and the front and rear gardens, to extend the small original basement to a much larger, two storey space. The new basement will accommodate a plant room and swimming pool on the lower level and a bar, steam room, exercise room and cinema on the upper level.

The Type C system comprised BBA certified Platon P8 cavity drain membrane to the floor and BBA certified Platon P20 cavity drain membrane to the walls. Perimeter channels were formed to house Triton Aqua Channel drainage conduit to divert any water entering behind or beneath the membranes to the sump and pump system. To allow for maintenance of the system, rodding eyes were installed to the Aqua Channel every 10 linear metres.

A Triton sump and pump system (Triton Aqua Pump Pro with battery back up) was situated at the lowest point behind the pool to take any low level water up to a larger sump/pump station at a higher point in the basement from where it will be pumped out.

Before installation of the Platon membranes, all new concrete was treated with Triton Anti Lime Coating to seal the surfaces and reduce the leaching of 'free lime' which could cause blockages behind the membranes or in the drainage system.

Main contractor:
Akarana Builders Ltd

Triton approved contractor:
Advance Property Preservation Ltd
www.advanceservices.co.uk

BBA APPROVAL INSPECTION TESTING CERTIFICATION
CERTIFICATE 14/5129

Triton Systems
Units 3 – 5 Crayford Commercial Centre, Greyhound Way,
Crayford, Kent DA1 4HF

Tel: 01322 318830
Fax: 01322 524017
Email: info@tritonsystems.co.uk
www.tritonsystems.co.uk

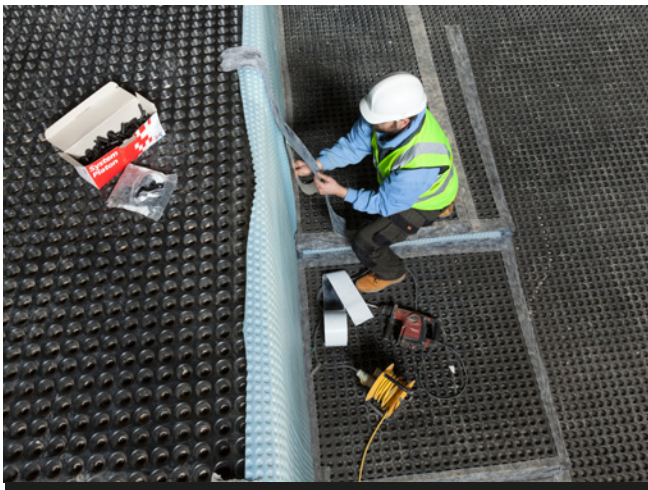

Joints between membranes being sealed with Platon Sealing Tape

Platon P8 was fixed to the walls with deeper studded Platon P20 laid to the floor

The new two-storey basement will house a large swimming pool

Case Study

Triton supplied:
Triton supplied Platon P8 and P20 cavity drain membranes, Triton TT55, Triton TT Vapour Membrane, Triton Fillet Seal and ancillary fixing and sealing materials.

NEW BUILD MEWS PROPERTIES

Triton has supplied a range of waterproofing systems, plus technical support, to a West London new build project comprising two adjoining, high spec mews properties. This was a compact site requiring a complex waterproofing design for a multi-level basement comprising lift pits and two swimming pools recessed into the lower basement level. In view of the value of the properties and the variable water table, a combination of Types A, B and C waterproofing systems was specified to produce a robust solution, conforming to the Grade 3 basement category as defined in BS 8102:2009, that would inhibit any potential water ingress.

Each property will benefit from a two storey basement, the lower basement in each housing a swimming pool, media room, gym and plant room.

The basements were constructed using watertight concrete, with an external bentonite system installed as the first line of defence against moisture ingress, prior to the placement of the concrete. A continuous and linked internal waterproofing system was then installed using cavity drain membranes and liquid/cementitous applied materials.

Cavity drain membranes were installed to all earth retaining perimeter walls and the lower basement slab. The system is designed to drain down from upper to lower level via discharge outlets from the bunded perimeter drainage channel at the upper level. At the lower level a recessed channel accommodates a continuous drainage conduit around the perimeter of both properties and is waterproofed with Triton's liquid applied TT Vapour Membrane. Rodding eyes were installed at 10LM internals and at every change of direction to facilitate maintenance of the drainage system. The system drains to sumps in each property each fitted with Triton's mains powered, twin Aqua Pump Pro system.

The swimming pools, plant rooms, service trenches and lift pits are recessed into the lower basement level forming in effect a third basement level. Both pools and all walls at this level are waterproofed using Triton's TT55, a cementitious liquid applied membrane combined with TTME elasticiser to accommodate changes in pressure caused by emptying and filling the pools and the noise and vibration from the lifts. A cavity drained system cannot be punctured so this system also facilitates the resin fixing of heavy plant to the walls in the plant rooms and service trenches.

The perimeter drainage channel at floor level of the lower basement continues at the same level around the top of the swimming pool liner walls and discharges behind the walls of the trenches and plant rooms to either of the two sumps recessed in each plant room floor. Platon P20 membrane continues the sealed cavity drained system across the floors of the plant room and service trenches.

Platon P8 membrane to wall at upper basement level with perimeter drainage channel sealed with TT Vapour Membrane and Corner Strip, showing access point via 40mm pipe and 90° bend.

Lower basement level showing Platon P8 membrane on wall to soffit detail sealed with TT Vapour Membrane. 40mm discharge outlets drain down from the level above and angle back towards perimeter liner wall.

Upper basement level showing P8 membrane to walls and bunded perimeter drainage channel.

Case Study

The bunded upstands at floor wall junctions, and other wall/floor and wall/soffit details are sealed with Triton's liquid applied TT Vapour Membrane and Corner Strip sealing material to create a complete and continuous internal waterproofing system across all substrates and levels of the basement.

Main contractor/Triton Approved Contractor:
Knight Build Limited

Service trench waterproofed with TT 55 to walls and Platon P20 membrane to floor. Lower basement level drainage channel runs around upstand of trench liner wall and discharges behind wall down to perimeter drainage channel set in trench floor slab.

Completed trench looking up to suspended steel floor to lower level basement.

Bunded wall to service trench edge detail.

Swimming pool recessed into lower basement level floor. Perimeter drainage channel at floor level runs around top of pool liner wall. Pool walls and floors are waterproofed with TT55/TTME with Fillet Seal detail at wall/floor joints.

Triton Systems
Units 3 – 5 Crayford Commercial Centre, Greyhound Way,
Crayford, Kent DA1 4HF

Tel: 01322 318830
Fax: 01322 524017
Email: info@tritonsystems.co.uk

www.tritonsystems.co.uk

0936 03/15